Physics 4BL: Electricity and Magnetism
Lab Manual

UCLA Department of Physics and Astronomy

Last revision May 21, 2017

Contents

Introduction

The objective of this course is to teach electricity and magnetism (E&M) by observations from experiments. This approach complements the classroom experience of Physics 1B,C where you learn the material from lectures and books designed to teach problem solving skills. Historically, E&M evolved from many observations that called for a theoretical explanation. It is a great achievement that all classical E&M phenomena can be explained by four equations, the so-called Maxwell's equations. This laboratory course is designed to perform experiments showing the validity of these equations.

In the laboratory, you will have different experiences than in the classroom. In the real world, there are no point sources, no infinities, all measurements have errors, and sometimes things don't work out as expected. A broken instrument or wire can be as frustrating and time consuming as trying to solve a seemingly impossible homework problem. You will have to learn patience and persistence to make good measurements.

For solving theoretical problems you first need to learn the appropriate mathematical tools. For performing experiments you first need to become familiar with measurement tools, called instruments. These include multimeters, oscilloscopes, signal generators, a Gaussmeter, digital scale, power supplies and computers. The first lab session is devoted to acquaint you with modern digital data acquisition methods. It is expected that you are already familiar with Personal Computers (PCs) and basic software such as spreadsheets. In the lab you will record your data to file, copy the files to USB sticks and evaluate the results at home or a computer lab.

Each experiment has questions to be answered in your lab notebook and homework assignments to be turned in a week later. Some assignments will be parts of a lab report and some will be full reports. A laboratory report should contain a very brief description of your experiment (no need to copy the lab manual), the data obtained (usually in the form of graphs) and evaluations such as line, surface and volume integrals, curve fitting, circuit analysis, and any questions raised in the lab manual. The report should be written concisely in a scientific language; it is not an essay where you admire the beauty of science or express your frustrations with the equipment. The TA has no time to read excessively long lab reports. He/she will only look for correct answers and understanding of the results. The reports are due a week after the experiments have been done. Data are shared within an experimental team but the reports should be written individually. Copying other reports constitutes plagiarism and will be reported to the Dean of Students with unpleasant consequences. Bring a personal notebook to the lab to keep a record of what you did.

Laboratory 1: Circuits

The goal of this lab is to become familiar with some of the equipment and techniques you will be using this quarter. You will also investigate some simple and some more complicated electronic circuits. Record your results and the answers to the questions below in your lab notebook. There is a short graphing assignment at the end which will be turned in for grading next week. If you need to review error analysis, please see appendix A, especially Propagation of Errors and equation (3).

Part of your grade is lab participation. This includes preparation, being on time, keeping an organized and safe work area and returning the lab station and equipment to its original state before leaving.

The Digital Oscilloscope

The oscilloscope is a basic tool in any physics or engineering lab. Modern digital "scopes" sample the input voltage at around 1 GHz, or 1 analog to digital conversion (ADC) every ns. The scope provides its own calibration signal, a 1 kHz 5 V amplitude square wave. In this lab exercise, you will perform three tasks to help familiarize yourself with the scope and its functions.

Calibration Signal

Press the Default Setup button near the top right hand side of the scope (It is one button down and in from the right corner). Clip the leads from Channel 1 to the Probe Compensation terminals at the lower right corner of the scope. The red probe should connect to the Probe Compensation terminal, and the black probe should connect to ground. The signal is not steady because the trigger level is set to 0 V by default. There are two ways to fix this; first, adjust the trigger level to some small positive voltage using the trigger level knob on the right hand side of the scope. While you're adjusting it, the trigger level is shown on the screen and the trigger channel and voltage is always indicated at the bottom right. When the signal is steady, adjust the channel 1 voltage Scale knob until you can see the whole trace on the scope. What is the voltage amplitude shown on the scope? The volts per division is indicated at the lower left of the screen. The time per division, is shown in the lower center of the screen.

If the square wave shows 50 volts instead of 5 volts, it is because the default oscilloscope probe is a 10× attenuating probe. We are not using a 10× (times 10) probe but rather a 1× probe with no attenuation. From the channel 1 menu (yellow button), find the Probe Voltage setting, then attenuation and change it from 10× to 1× so the voltage will display correctly. Press in the multipurpose knob when done selecting.

Triggering

The trigger indicator is shown at the top center screen as an orange T. Some of the data displayed (to the left of center) is taken pre-trigger. Note that you are triggering on a rising edge which looks pretty steep at this timescale. Turn the Horizontal scale knob to 1 μs per division. About how long does it take for the pulse to rise to its full value? First estimate this value by eye. Then, using the *measure* button on the scope, setup the scope to measure the risetime of channel 1. These numbers should be fairly close.

Use the channel 1 Scale button to change the voltage scale to 5 mV per division. The pre-trigger signal should be 0 volts. Estimate the noise or uncertainty in this 0 V measurement. Hit the single

button on the top right hand side a few times to see single noise traces. You can also use the Run/Stop button.

Autoset

Another way to set up the scope for an unknown signal is to use the Autoset button. It analyzes the signal and sets the trigger and channel gains automatically to display the full signal. Try it and note the additional helpful information presented on the screen. (Autoset does not change the probe attenuation setting so it may still need to be set manually).

Potentiometer

A potentiometer is sometimes called a pot, a trimpot, bias or a voltage divider. They are available with linear or logarithmic tapers. In this lab you will use a 10-turn 10 kΩ wirewound linear potentiometer. With one turn of the control knob, the sliding connector moves 1/10 of the way along the wire resistor. If the circuit were hooked up as shown below in figure 1, what voltage would we read at the sliding connector, called the wiper? Derive an expression for V_{out} in terms of V_{in}, R_1 and R_2.

A potentiometer can be thought of as a voltage divider with two variable resistors whose resistances are related such that their sum is always a constant ($R_1 + R_2 = R_{total} =$ constant).

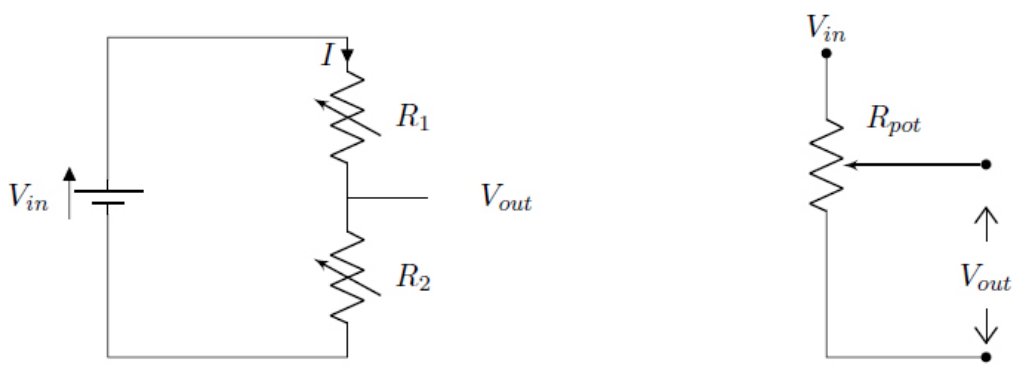

Figure 1: Potentiometer. R_1 and R_2 are variable resistors whose resistances are changed by turning the potentiometer knob. The current I is flowing as shown above. The circuit on the right is an equivalent representation of a potentiometer, where the height of the wiper arrow along the side of the resistor indicates the amount of resistance allocated to R_1 (above arrow) and R_2 (below arrow).

The potentiometer has 3 leads and a knob on top, something like in Figure 2

Investigate how V_{out} changes as the potentiometer knob position is changed, and determine the functional form of $V_{out}(\theta)$. Here, θ will be the angle through which the potentiometer knob has been rotated from its initial position in radians.

To do this, first build the circuit depicted in Fig 1, with $V_{in} \approx 5V$ coming from the regulated power supply applied to the red and black ports.

Besides the digital oscilloscope, you will also use a computer based Data Acquisition system called the myDAQ from National Instruments. The myDAQ also can be used as a multimeter and function generator. You will use the MyDAQ to measure V_{out}.

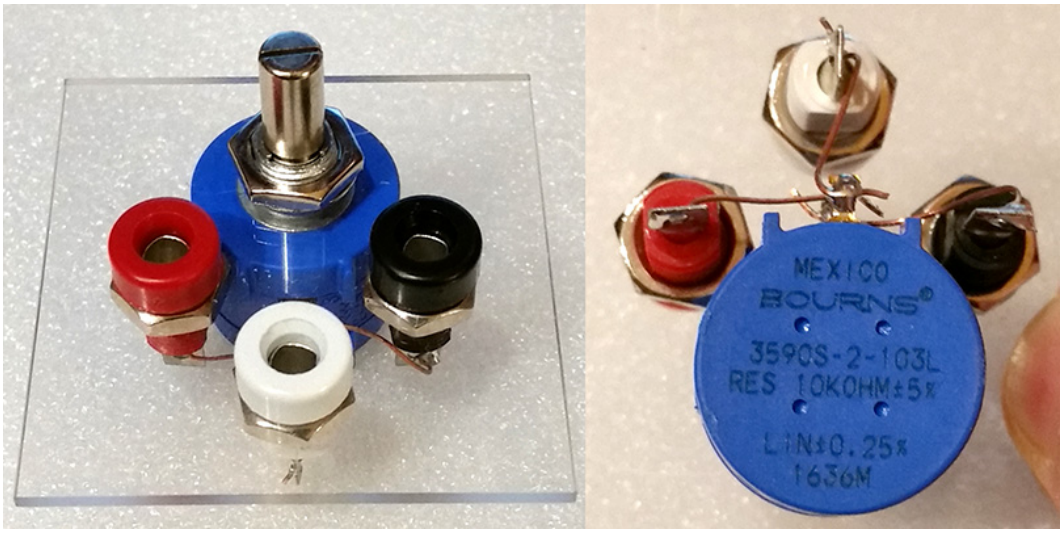

Figure 2: Our potentiometer. The potential difference is applied across the outer two ports (black and red), and V_{out} is measured from the center wiper port (white) relative to the black port.

To do this, connect the CH0 red port (henceforth called CH0+) on the MyDAQ to V_{out}, and the black port on the potentiometer to the CH0 black port (CH0−) on the MyDAQ. To measure the voltages using the MyDAQ, open the 4BL Application on your computer. Set it up to measure "fixed time" and set channel limits to ±10 V. In this setting, the MyDAQ will sample the voltage every Δt, which is determined by the number of points and sample rate you choose. Set the number of samples to 100 points, and sample at 1000 points per second.

Turn the control knob all the way one direction until it stops. Use the MyDAQ to measure V_{out}. To determine what the output voltage value is, press the Statistics button on the 4BL Application page. If the mean is around 5 V, swap the power wires so the output voltage is $\approx$ 0V.

We will call this position our starting angle, and define the voltage that it is reading out as $V_{out}(\theta = 0) = V_o$ (which may be zero). Record V_o in your lab notebook. Without changing V_{in}, now rotate the potentiometer knob in $\Delta\theta = 180°$ steps and record V_{out} at each step by reacquiring data on the 4BL Application. Note that in this case, $360° \neq 0°$ because $V_{out}(\theta)$ is not a periodic function of θ. So when you record your angles, keep adding $\Delta\theta$ without wrapping around the angle at 360° (i.e. $540° \neq 180°, 720° \neq 360° \neq 0°$, etc.) **Record all of the voltage and angle data in Microsoft Excel. Once finished, save the excel file to a USB stick**.

Take note of the data's form as you collect it. What does the functional form of $V_{out}(\theta)$ seem to look like?

Written Homework Assignment: Create a plot of the V_{out} vs. θ data, and run a linear regression. Present the plot with a figure description and fit line including uncertainties.

Magnetic Levitator

Equilibrium

At the board, unplug the power cable and the white cable to the copper coil. Take the magnet on the bolt and raise it near the bottom of the coil. At a certain height it is attracted to the steel

bolt. Below that point, gravity is dominant and it falls. Above that point, the magnetic attraction is greater than gravity. Try to measure how far below the coil is the equilibrium point? Is the equilibrium stable or unstable?

Infrared LED and Phone Cameras

Plug in board power and the black sensor cable but not the white coil wire. The sensor is made up of a clear infrared diode that projects a beam of infrared (IR) light (below the visible red frequency) and a dark IR sensor whose conductivity changes with the amount of IR light falling on it. Block the beam with your finger and notice that the red LED light on the board comes on when the sensor is blocked (if the red LED on the board does not light up, check the wiring and that the plugs are fully inserted etc.). While one cannot see whether the clear IR emitter is on by eye, many digital cameras are sensitive to IR. If you put a Samsung phone camera in front of the clear LED, you can see it shining in the IR. Try it, see whether your phone camera is sensitive to IR or has an IR blocking filter installed. Note results of your group phone tests.

Levitate

Plug the white coil wire into the board. Now the red LED also indicates when current runs through the coil. The energized electromagnet should attract the magnet. (If it repels, flip the magnet over). The idea here is to adjust the sensor so the bottom of the bolt and nut just half blocks the IR beam when the magnet is just below the equilibrium position. You can adjust this by raising or lowering the sensor in its slot, or by lengthening or shortening the bolt by adjusting the nut on the bottom.

Feedback Control, PID

This is an example of a feedback circuit. The position of the floater is sensed and fed back to control the coil current. If the magnet falls and blocks more of the beam, the coil is turned on to attract it. This is called proportional feedback. After it reaches the desired height or setpoint, the coil is turned off and the magnet begins to fall again. For stable control though, we don't want the magnet ping-ponging through the setpoint. We need some damping so that the velocity is also near 0 when the magnet is near the setpoint. To add damping we also feedback on the velocity of the floater which is the derivative of the position signal. The faster it is moving, the more important to damp the motion. In terms of feedback circuits, this is a PD controller, a form of PID (Proportional, Integral, Derivative) controller.

Circuit Description

The circuit depicted in Figure 4 works approximately as follows: The sensor signal, which carries the position data, goes to op Amp 1 where it is subtracted from the setpoint voltage connected to the other op amp 1 input. The difference between the setpoint and the position sensor, called the error signal, is amplified by op amp 1 and output to where the magic happens.

The proportional and differential gains are set by the values of the capacitor and resistor in parallel before op amp 2. The voltage appearing across the resistor path is proportional to the error signal. The voltage appearing across the capacitor path is proportional to the derivative of the error signal and is phase shifted. These two added signals are amplified by op amp 2 and the output is used to control the coil output transistors. One way to think about the capacitor is to

consider its impedance $Z_c = \frac{1}{\omega C}$ where $\omega = 2\pi$ frequency. The capacitor has a very high resistance for low frequency (slow) signals but acts like a short circuit for high frequencies. At about 10 Hz the resistance and impedance paths are equal, doubling the signal. Signals faster than 10 Hz are boosted even more by the capacitive path.

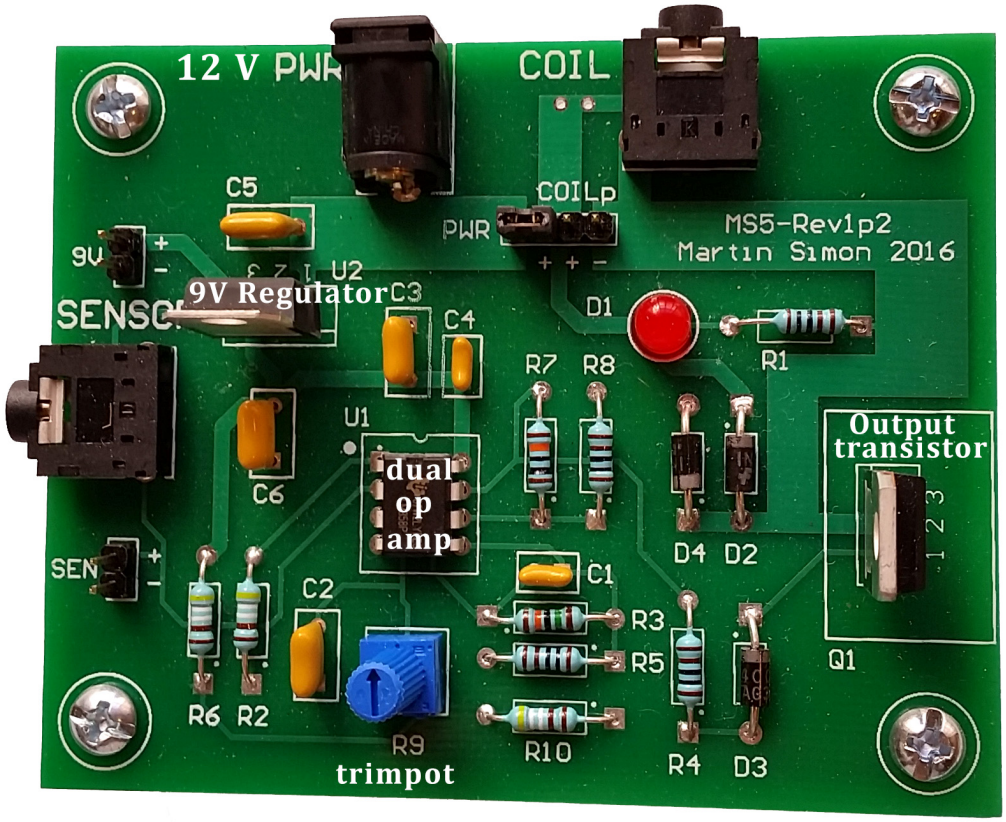

Figure 3: Levitation circuit - Left side; 9 V voltage regulator supplies the sensor unit and op amps. - Right side; Output from the second op amp controls the coil current through the Darlington transistor pair. The two diodes around the coil drive are designed to protect the circuit from voltage spikes. The coil is inductive and generates large positive and negative voltage spikes when it is switched on and off by the transistor.

Trimpot

Find the trimpot on Figures 3 and 4. In this circuit the potentiometer is used to fine tune the position setpoint on op amp 1. The setpoint voltage is determined by the voltage divider made up of fixed 5 kΩ resistors and a 10 kΩ trimpot. The trimpot voltage is compared to the sensor signal at op amp 1, and the difference is amplified. The 10 kΩ trimpot is less than one turn and adjusts the floating height about 1 mm.

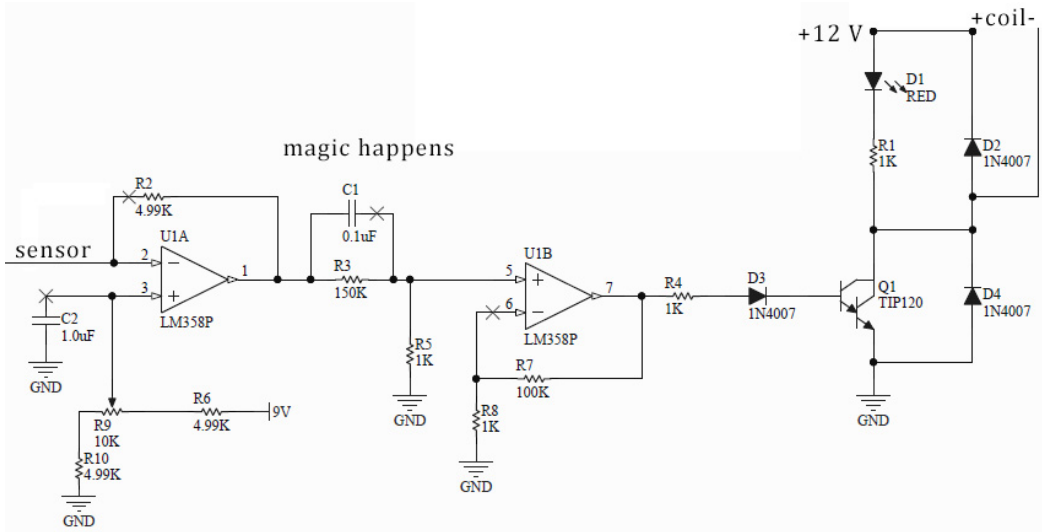

Figure 4: Levitation circuit - PD control: The proportional and derivative gains are set by the resistor and capacitor in parallel between the op amps. That's where the magic happens. The Voltage across the resistor is proportional to the distance the magnet is from the equilibrium point. The capacitor acts as a differentiator, adding the velocity information with a phase shift. The differential term adds necessary damping, so that the magnet slows to a stop near the equilibrium setpoint instead of overshooting.

Lab Assignment

This lab assignment will consist of a series of questions intended to be answered in your lab notebook and checked by the TA before leaving lab. You will also need to submit a plot online within a week.

Lab Notebook

1. Oscilloscope
   - What is the initial measured amplitude of the scope's calibration signal?
   - What is the risetime of the calibration signal as measured by eye? What is it when using the risetime measure function on the scope?
   - Estimate the uncertainty in the 0 V signal from the pre-triggered portion of the signal. What do you notice when looking at the individual traces of the signal?
   - When would it be beneficial to use the autoset feature of the scope?
2. Potentiometer and MyDAQ
   - Derive an expression for V_{out} on the potentiometer wiper as a function of the input voltage, R_1, and R_2.
   - What voltage are you applying across the potentiometer?
   - What is the apparent functional form of the potentiometer's output voltage as a function of the turning angle θ?
   - Is the potentiometer ohmic, does it follow Ohm's Law $V = IR$?

3. Magnetic Levitator
    - About how far below the magnetic coil is the equilibrium position of the bolt (measured to the magnet on top)?
    - Is this equilibrium stable or unstable, and how can you tell?
    - Which cell phone cameras in your group were sensitive to the IR light?

Figures and Data Presentation

Using the data you saved in Excel, you will determine how the potentiometer's output voltage depends on the angle through which the control knob has turned. Additionally, you will calculate what is called the Independent Linearity of the potentiometer to compare to the manufacturing company's claim. You can find this rating listed on the bottom of the potentiometer in Figure 2 This is to be completed within one week after the lab is performed, and submitted on Turnitin. Present the plot on a blank page with a figure caption. You will need to:

1. Raw Data Plot
    - In Excel, place all your output voltage data in one column, and their corresponding θ values in the column to the right.
    - Create a scatterplot of all the V_{out} vs. θ data, and run a linear regression on the data as well. Plot the fitline on the same graph as the data, along with a fit equation and uncertainties.
    - In a sentence or two below the figure caption, discuss the significance of the intercept and slope of the fit line.
2. Independent Linearity Calculation
    - Plot the normalized output voltage V_{out}/V_{in} vs. θ and run a linear regression to get the fit line with uncertainties.
    - In a separate column, calculate the discrepancy between the fit line and the experimental data for each point. This means if the fit line is $y(x) = mx + b$, for each x value calculate the difference between what the fit line produces and what was observed in the lab.
    - Find the minimum and maximum deviation from the fit line. Then, calculate the maximum and minimum percentage deviation from the fit line with respect to the applied voltage (% deviation = (deviation$\times$100)/V_{in})
    - The manufacturing company claims a maximum tolerable independent linearity of $\pm 0.25\%$. Do your results fall within this tolerance range? What does this say about the potentiometer you used?

Laboratory 2: Lorentz Force

Lorentz Force

In 1897, only 120 years ago, J.J. Thomson discovered the electron and measured its charge to mass ratio, e/m. The electron was the first sub-atomic and first elementary particle discovered. You will repeat this Nobel Prize winning experiment as part of today's lab and write a report on your findings. Measuring e/m makes use of the Lorentz Force on a particle with charge q traveling at velocity $\mathbf{v}$ through magnetic field $\mathbf{B}$.

$$\mathbf{F} = q\mathbf{E} + q\mathbf{v} \times \mathbf{B} \tag{1}$$

The magnetic part for electrons

$$\mathbf{F}_B = -e(\mathbf{v} \times \mathbf{B}) \tag{2}$$

is "non-Newtonian" in the sense that the force vector is not along the line connecting two charges or masses, but rather is perpendicular to both the electron velocity and the direction of the magnetic field. Use the right hand rule to figure out the direction of the force. If the magnetic field is strong enough to bend the beam into a circle with radius R, we can equate the magnetic force to the centripetal force required for uniform circular motion $F_c = mv^2/R$. The geometry is optimized so that the electron velocity is always perpendicular to the magnetic field, so

$$evB = \frac{mv^2}{R} \tag{3}$$

From this we can measure the charge to mass ratio of the electron, e/m. See Figure 5 and use the right-hand-rule to check that the direction of the magnetic force is indeed in the direction required for uniform circular motion.

Cathode Ray Tube (CRT) and Electron Gun

The apparatus is a form of cathode ray vacuum tube (CRT). The electron beam, or cathode ray, is created by an electron gun similar to the diagram in Figure 6. Electrons are boiled off a glowing filament or a cathode coated with a good electron emitter. Look behind the electron gun from the side and you will see the glowing filament. An anode biased a few hundred volts V positive relative to the cathode pulls electrons from the cathode and accelerates them in one direction. The electrons emerge from an aperture in the anode with a kinetic energy equal to eV or below. Electrons are not visible directly, but they can scatter from and excite the low pressure mercury gas in the tube.

The electron beam can be deflected by electric and magnetic fields. Our e-gun has two deflection plates in front of the anode aperture. Look at them and try to figure out the electric field direction at the aperture if the top plate is positive relative to the bottom plate. What direction is the electric field at the beam? Without electric or magnetic fields, the beam will follow a straight path and hit the glass. Don't allow the beam to hit the same spot on the glass for many minutes at a time. It can drill a small hole and destroy the vacuum in the tube.

Make sure the magnetic field current is off. Turn up the voltage on the deflection plates (knob at the bottom, left hand side). Turn up the accelerating voltage slowly until the beam appears moving to the left. Use the polarity rocker switch to apply the deflection voltage to the plates and

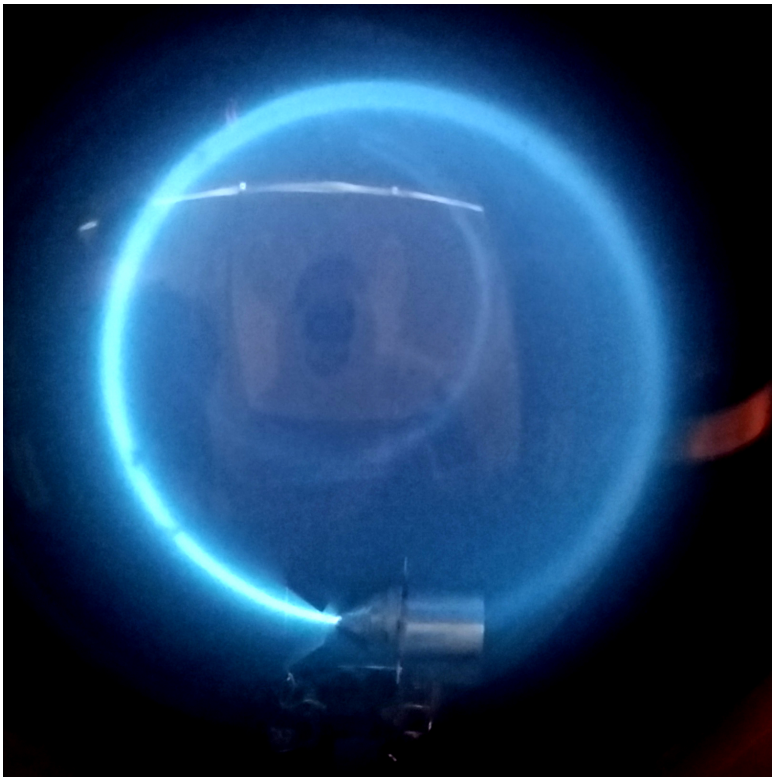

Figure 5: The metal electron gun at the bottom produces a narrow beam of electrons with energy eV, where V is the acceleration voltage. There is a uniform magnetic field into the page. The magnetic part of the Lorentz force produces a centripetal acceleration, bending the electron path into a circle. The electrons can not be seen but their trajectory is made visible by a small amount of mercury vapor in the evacuated tube. Some of the electrons collide inelastically with the mercury vapor, exciting it to emit light.

note the deflection direction. When done, turn both voltages down to zero and put the rocker in the center position.

Turn up the magnetizing current to the two large coils to about 1 amp clockwise. Use the right hand rule to figure out the direction of the magnetic field at the location of the beam. Note the direction in your lab notebook. Turn up the beam accelerating voltage until the beam appears. Note in your lab notebook qualitatively how the radius of the beam changes with accelerating voltage and magnetizing current.

Grasp the tube at the bottom plastic base and carefully rotate it in its socket. Describe the electron beam motion in your notebook. Discuss how this motion follows from the Lorentz Force equation. The initial velocity of the electron beam has components along the magnetic field and components perpendicular to the field. $\mathbf{v} = \mathbf{v}_{\parallel} + \mathbf{v}_{\perp}$

Align the tube so that the circle lies in a plane perpendicular to the magnetic field. $\mathbf{v}_{\parallel} = \mathbf{0}$ This alignment is important for the measurements to follow.

In your notebook, starting from $evB = mv^2/R$, show that if V is the accelerating voltage

$$\frac{e}{m} = \frac{2V}{B^2R^2} \tag{4}$$

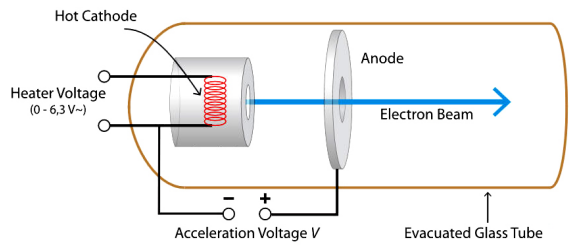

Figure 6: The electron gun uses thermionic emission and an electric field between the anode and cathode to produce a narrow beam of electrons with energy eV. Our electron gun also has electrostatic deflection plates in front of the cathode which can be used to create a vertical electric field.

.

Helmholtz Coils

The magnetic field strength is controlled by the current I to two large coils. The intent is a very uniform magnetic field over the path of the electron beam. The configuration which optimizes the uniformity of the field in the midplane is called a Helmholtz coil. The two identical coils of radius R_c are spaced a distance R_c apart. The magnetic field at the center is then given by [1]

$$B = \frac{8\mu_0 I N}{5\sqrt{5}R_c} \tag{5}$$

where N is the number of windings in each coil. Our coils have a radius of .140 m and N=150 turns.

Helmholtz coils are widely used in sensitive experiments to cancel the earth's magnetic field. Three orthogonal pairs can create or cancel fields in any direction. Should we be worried about the earth's field in our measurement of e/m? The earth's field is about 0.5 gauss, or 50 μT.

Measurement of e/m

Find an expression for e/m in terms of the accelerating voltage V, the coil current I and the beam radius R. The general idea is to set the acceleration voltage and the coil current, and then measure the radius of the electron beam. Develop a plan to take data for at least 6 different settings that cover the range between 100 to 200 V and 1 and 2 amps. Each person should make at least two measurements, but analyze all 6. The key to making a good measurement is overcoming parallax in the radius measurement. Fix the ruler at the correct height. Position your eye directly in front of the left side of the beam. Slide the index to the left side of the arc and sight down the groove in the top of the index. Read the scale and then repeat on the right side to the right edge. The difference divided by 2 is the radius. Record the Voltage, Current, and radius. Use multimeters connected to the banana jacks on the back for accurate measurements. Make sure the multimeters

[1] Deriving the relationship between the radius of the coils and their optimal distance apart for the most uniform field in the center is a common homework or exam problem. We start from the equations from Biot-Savart for the magnetic field due to a loop of radius R_c, on axis, a distance x away $B = \frac{\mu_0 I N {R_c}^2}{2(x^2+{R_c}^2)^{-3/2}}$. Using superposition, we can write the field in the center when the coils are $2x$ away from each other. To optimize the field, the gradient and the curvature, the first and second derivatives of B with respect to x, are set to 0 and x is solved for.

are set up correctly to make the Voltage or Current measurement and that the range is correct. If the meters aren't set correctly, they can effect the performance of the CRT. For each set of values of V, I, and R, you will calculate e/m.

Written Assignment: Write a short lab report about your e/m measurements and results.

Diodes and transformers

A common problem is to design a DC power supply for a given circuit. Typical electronic circuits operate at a low voltage and DC (Direct Current). The wall plug provides 120 Volt 60 Hz AC (Alternating Current). For example, the Lorentz Force apparatus has at least three power supplies. Starting with 120 VAC from the wall plug, it generates 6.3 V for the filament current, low voltage DC amps for the Helmholtz coils, and up to 250 Volts DC for the accelerating voltage. For the rest of this lab you will investigate circuits that can be used to change voltages and convert AC to DC. Observations should go in your lab notebook and will not be part of the lab report due next week.

The first step in making a DC supply is usually a transformer. In this part of the lab we use a step-down transformer that converts 120 VAC to 12 VAC. Find the transformer in a black case on the lab bench. Unplug it and take off the top so you can inspect it. Transformers have two coils, a primary and a secondary. The primary coil plugs into the wall and handles the full 120 V. The secondary coil connects to the output. Find the primary and secondary coils on this transformer. They are wrapped around a laminated iron core to duct all the magnetic flux from the primary to the secondary. The output voltage is determined by the turn ratio of the coils. $V_{out} = \frac{N_{secondary}}{N_{primary}} V_{in}$ Read the removable top of the transformer. It gives information about the transformer input and output and how much power the primary and secondary can handle before melting. We are using a 1 amp fuse on the secondary to protect the transformer and circuit.

Connect a 5 kΩ resistor across the output wires and read the voltage across the resistor on the oscilloscope. Set the scope to trigger off the AC line. Note the voltage and other characteristics of the signal in your lab notebook and compare to the label on the transformer.

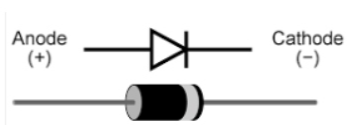

Figure 7: The orientation of a diode and the diode symbol. The band on the physical diode is the cathode end. The diode only conducts (forward bias) when the anode end is at least a diode drop higher than the cathode end. A typical silicon diode drop is 0.7 V.

Next add a single diode (Figure 7) to the circuit between the fuse holder and the resistor as shown at the top of Figure 8. Again, display the voltage across the resistor on the scope and note the waveform. Try switching the direction of the diode and see what happens. Diodes are non-Ohmic circuit elements that conduct primarily in one direction (the forward bias), and block current in the other direction (the reverse bias). This behavior is called rectification and can be used to convert an AC current to a DC current. The voltage drop across a diode when conducting is called the diode drop. It is typically about 0.6 - 0.7 volts for silicon diodes.

The next step is to build the full-wave rectifier shown at the bottom of Figure 8 or 9. Before testing your circuit, add a 1 kΩ resistor in series with the secondary before the diodes. This is to protect the circuit in case you hook the diodes up wrong and short the secondary. After you have the

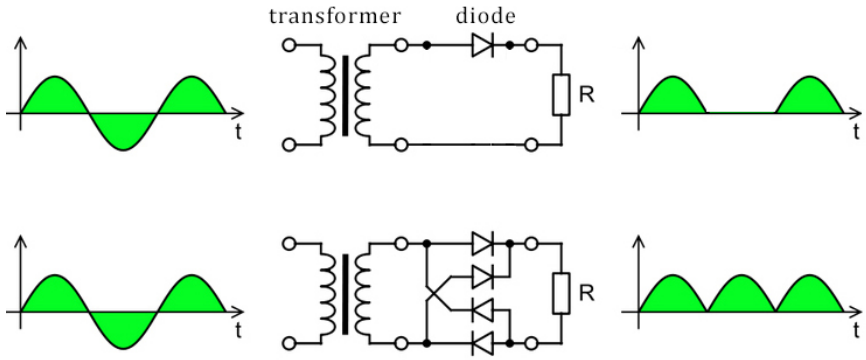

Figure 8: Two ways to convert Alternating Current (AC) to Direct Current (DC). The top shows half-wave rectification achieved with a single diode. The bottom shows full-wave rectification achieved with four diodes

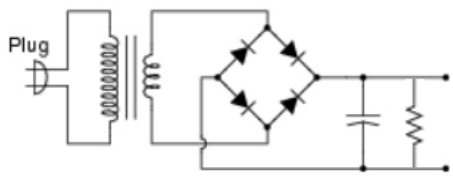

Figure 9: A simple DC power supply using a diode bridge. The diodes are wired the same as in Figure 8, just drawn differently.

correct waveform shown in the figure, you can remove the 1k resistor. Trace out how the current flows in this circuit for the cases where the top of the transformer is positive or negative. The top of the resistor should always be positive with respect to the bottom of the resistor.

Finally, add the 47 μF electrolytic capacitor in parallel with the 5k resistor as shown in Figure 9 and observe what happens on the scope. Careful, electrolytic capacitors are polarized and can only be used in DC circuits. The white band with arrows shows the negative terminal of the capacitor. Make sure the negative lead is connected to the negative side of the diode bridge. (Reverse biasing an electrolytic capacitor can cause it to fail or explode from gases generated internally.) You should see a constant DC voltage with a ripple on top. Record the DC level and the magnitude of the ripple.

When done, unplug the transformer and return the circuit elements into their proper location.

Lab Assignment

This lab assignment will consist of a series of questions intended to be answered in your lab notebook and checked by the TA before leaving lab. You will also need to submit a lab report online within a week.

Lab Notebook

- What is the direction of the magnetic field at the location of the beam?
- Qualitatively, how does the radius of the beam change with accelerating voltage and magnetizing current?
- Describe the spiral motion. How does it follow from the Lorentz Force equation when the velocity of the electrons have components along the magnetic field and components perpendicular to the field. $\mathbf{v} = \mathbf{v}_{\parallel} + \mathbf{v}_{\perp}$?
- Starting from $evB = mv^2/R$ show that if V is the accelerating voltage $\frac{e}{m} = \frac{2V}{B^2R^2}$.
- e/m data
- What is the transformer secondary signal compared to voltage rating?
- Record the DC level and the magnitude of the ripple for the simple DC power supply.

Lab Report on e/m Measurement

For the lab report, you are tasked with presenting data before and after manipulation, and explaining important results. Additionally, you must introduce the experiment, explain the experimental setup and data collected, analyze the data, and draw conclusions from the numerical analysis.

1. **Cover Page**
   - Descriptive title
   - Date the lab was performed
   - Your name, and your lab partners' names
   - Your TA's name and lab section
2. **Introduction**

   The introduction section explains, in your own words, the purpose of your experiment and how you will demonstrate this purpose. Try and be as brief as possible, yet still get your point across.
3. **Experimental Description and Results**

   This section should briefly explain what was measured and how the data was collected (diagrams of the experimental set up may be helpful), present the raw data in graphical form (if possible) including uncertainty values with all numbers. Your graph should include labels on both axes that include units. Label your graphs as Figure 1, Figure 2, etc, so that you can refer to them in your text. In the text, explain the meaning of the variables on both axes and include an explanation that makes it clear to the reader how to interpret the information displayed on in the plots.

   Along with a description of the experimental setup, your report should contain:

   - Table of experimentally relevant values (V_{accel}, I_{coils}, electron beam radii R, e/m values)
   - Plot of V_{accel} as a functin of $B^2R^2/2$.

4. **Analysis**

   This section should present any calculations performed on the raw data, including uncertainties using propagation of errors (although this calculation need not be shown). Example: if you are testing Ohm's Law $V = IR$, and you measured V and R, then here you calculate I. If you have a theoretical value for your calculated quantity (I in this example), state whether it is within your uncertainty range. Also, answer any questions proposed in the lab manual.

   This section should include:

   - Experimental mean value of e/m_e from all measurements with uncertainties.
   - Results of linear regression of V_{accel} as a function of $B^2R^2/2$.
   - Compare the two methods of determining e/m. Which is more accurate?

5. **Conclusion**

   State how your results demonstrate (or fail to demonstrate) the objectives you presented in the introduction section.

Laboratory 3: AC Circuits

Background Information

In this laboratory exercise you will examine some basic properties of AC circuits. You will investigate the transient state behavior of RC and RL series circuits, as well as a resonant RLC circuit. AC currents can vary in amplitude, frequency, and phase, as opposed to DC currents which take on a singular value. A perfect DC signal can be thought of a zero frequency signal. The performance of an AC circuit is often frequency dependent, and require a generalization of the idea of resistance called impedance (Z).

AC Circuits

To create an AC circuit, we connect our circuit element to a voltage source that varies in time, causing a current to be driven which alternates in direction with time (often sinusoidally, but not necessarily). In addition to the resistive components studied last week, an AC circuit also uses reactive components: capacitors and inductors. The capacitance of a capacitor is defined as the ratio of the charge built up on each plate to the voltage difference between the two plates:

$$C = \frac{Q}{V} \tag{6}$$

The unit of measure of capacitance is called the Farad (F). Differentiating this equation with respect to time yields an equation that relates the current through this circuit element to the voltage applied:

$$I = \frac{dQ}{dt} = C\frac{dV}{dt} \tag{7}$$

This shows that current flows through a capacitor only when we have a voltage that varies in time. Thus, if we connect a circuit containing a capacitor to a DC battery, no current will flow in the steady state because the capacitor acts as an open circuit. However, current will flow initially when the circuit is closed during the transient state, since at the instant the circuit is connected to the battery, the voltage changes rapidly from zero volts to the voltage of the battery.

Consider a circuit with a resistor and capacitor in series, called an RC circuit, connected to a battery. At the instant the circuit is connected to the battery, dV/dt is large, and so the capacitor doesn't impede the current flow. The current flow is impeded only by the resistor, and thus the full voltage of the battery is across the resistor. After a certain amount of time, the capacitor voltage settles at a constant (the voltage of the battery), with $Q(t) = Q_o = constant$, and thus no current flows. Therefore, the current is impeded only by the capacitor, and thus the full voltage of the battery is across the capacitor. This is called charging the capacitor. The initial response where the current is flowing is called the *transient state* period, and the period when the current stops flowing is called the *steady state* period. There is a a characteristic time for the transition between these two periods called the RC time. By using Kirchhoff's Law, Ohm's Law, and equation (6) we can derive the voltage as a function of time across the capacitor. The result is:

$$V_C(t) = V_b\left(1 - e^{-t/RC}\right) \tag{8}$$

where V_b is the voltage of the battery and we have assumed that at time $t = 0$ the circuit is connected to the battery. This equation defines the time scale of transition between the transient and the steady state:

$$\tau = RC.$$

The other reactive component we will be studying is called an inductor, which is characterized by its inductance defined by the relation:

$$V = L\frac{dI}{dt}. \tag{9}$$

The inductance L is measured Henries (H). This equation also shows that the voltage across an inductor is large when we have a rapidly changing current. Thus, if we form a circuit with a resistor and inductor in series (called an RL circuit) and at time $t = 0$ connect this circuit to a battery, we will again have a transient period and a steady state period. During the transient period, the current is rapidly increasing from no current (when the circuit is disconnected from the battery, $I_{initial} = 0$ A) to its maximum current. During this period, dI/dt is large, and thus the entire voltage is dropped across the inductor. In the steady state, the current settles at its steady state value, the current is impeded by only the resistor and thus the entire voltage drop is across the resistor. We can use Kirchoff's Law, Ohm's Law, and equation (9) to derive the voltage on the inductor as a function of time:

$$V_L(t) = V_b e^{-tR/L} \tag{10}$$

where V_b is the voltage of the battery and we have assumed that at time $t = 0$ the circuit is connected to the battery. This equation defines the time scale of the transition between the transient and steady state periods:

$$\tau = L/R.$$

Note that when $t = \tau$, we should expect $V_L(\tau) = V_b/e$, which is why we often call τ the "one over e folding time". It can be shown via Kirchoff's laws, Ohm's law, and Lenz's law that the current through the inductor in an RL circuit is of the form

$$I_L(t) = \frac{V_b}{R}(1 - e^{-t/\tau}) \tag{11}$$

This current will be measured by measuring the voltage drop across the resistor in series with the inductor, so it may be more instructive to write this as

$$V_R(t) = V_b(1 - e^{-t/\tau}) \tag{12}$$

where we have done nothing more than use Ohm's law.

In the first part, you will build an RC and an RL circuit, measure the voltage during the transient time period of the RC circuit and the current in the RL circuit, and calculate the characteristic time constant, verifying equations (8) and (10).

In the second part, you will build what's called an RLC resonant circuit, and examine the response of this circuit to sinusoidal voltages of different frequencies. You will see that the performance of the circuit depends greatly on the frequency of the driving voltage. However, first we need to review the concept of impedance.

From Resistance to Impedance

Ohm's Law $V = IR$ states that the current through a resistive component is proportional to the voltage applied. We can generalize this equation to also include reactive components (capacitors and inductors). The result is

$$V = IZ \tag{13}$$

where Z is called the impedance, and the voltage V is assumed to vary sinusoidally: $V(t) = V_0 \sin(\omega t)$. The impedance is a generalized resistance, which takes into account the fact that capacitors and inductors impede the flow of current when we have voltages and currents that vary in time. The impedance is a complex quantity, meaning that it is described using imaginary numbers. The real part of the impedance is called the resistive component, and the imaginary part is called the reactive component. An understanding of our circuits in terms of complex numbers won't be necessary for this course and we will skip a detailed analysis and just state the results.

First, the impedance of a resistor is just its resistance: $Z_R = R$, independent of the frequency ω of the driving voltage. Next, the impedance of a capacitor is given by

$$Z_C = \frac{1}{i\omega C}.$$

The feature to note is that the impedance is proportional to the $1/\omega$. This means that when $\omega \to 0$ the impedance of the capacitor becomes large. This makes sense when considering equation (7) because a small ω means the voltage is changing slowly, dV/dt is small, and a small current is allowed to flow. Conversely, if $\omega \to \infty$, then dV/dt is large, and a large current is allowed to flow. The impedance of an inductor is given by

$$Z_L = i\omega L,$$

which states that the impedance is proportional to ω. This makes sense in terms of equation (9) because a small ω corresponds to a small dI/dt and a large ω corresponds to a large dI/dt.

The circuit you will build to test these ideas is called an RLC resonant circuit, where an inductor, capacitor and resistor are connected in series. The series combination will be connected to a sinusoidal voltage source, and the voltage across only the resistor is the output voltage. The circuit is shown in figure 10. You will vary the frequency of the input voltage and measure the response of the output voltage. At low frequency, we know that the impedance of the capacitor Z_C will be high, and thus since $V_C = IZ_C$ all the voltage will be across the capacitor, leaving zero voltage across the resistor (which is the voltage we are measuring). At very large frequency, the impedance of the inductor will be large, the entire voltage will be across the inductor and again the voltage across the resistor will be small. Somewhere in the middle, the inductor and capacitor will effectively cancel each other out, and the entire voltage will be across the resistor. The frequency at which this occurs is called the resonant frequency, and is determined by

$$f_{res} = \frac{1}{2\pi\sqrt{LC}}.$$

In the second part of the AC circuits experiment, you will build an RLC circuit and find the resonant frequency by looking at the transfer (i.e. response) function $G(\omega)$ from the input V_{in} to the output V_R:

$$G(\omega) = \frac{V_R}{V_{in}} = \frac{IR}{IZ} = \frac{R}{R + i(\omega L - \frac{1}{\omega C})} \tag{14}$$

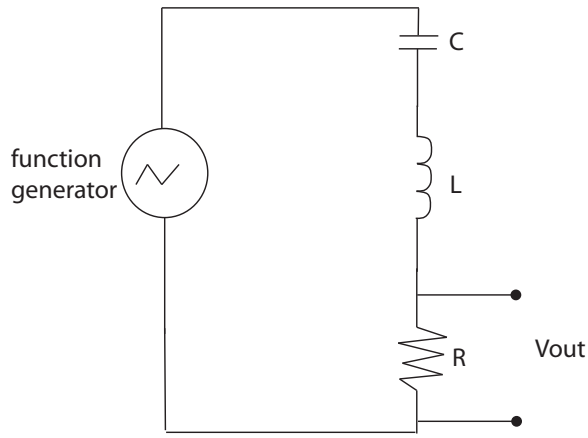

Figure 10: An RLC resonant circuit used in the AC circuits portion of the laboratory. A sinusoidal voltage is applied across the series connection of the 3 components, and the output voltage is the voltage measured across the resistor.

As we can see, the response function is frequency dependent and we expect a maximum value when the imaginary part of the denominator vanishes, that means, when $\omega^2 = 1/LC$ which is exactly the resonant frequency. Thus the resonant frequency is easily found by finding the $\max[G(\omega)]$.

Procedure and Measurement

RC Transient State Measurements

First, you will build an RC circuit with a resistor and capacitor in series and measure the voltage on the capacitor during its charging. After that, you will build an RL circuit and measure the voltage on the inductor during the transient period. Instead of connecting the circuit to a DC battery as described in the introductory section, we will use a square waveform produced by the function generator, which will repeatedly charge and discharge the capacitor or inductor. You will measure the voltages with the ADC of the computer and you will need to save the data to file to perform data analysis.

- Choose a resistor and capacitor combination giving a time constant $\tau = RC$ in a convenient range to measure using the ADC in the computer ($\approx 10^{-3}$ seconds). Build a series connection circuit on top of the aluminum break-out box. The circuit you are building is shown in figure 11.
- Next, apply a square waveform with frequency $f < 1/(2\pi\tau)$. Set the amplitude of the waveform to be about 2V, and use an offset equal to the amplitude, so that the waveform is at zero volts during the lower portion and 4V during the upper portion of the square wave. The waveform you want to produce is shown in figure 12. Use the oscilloscope at your lab

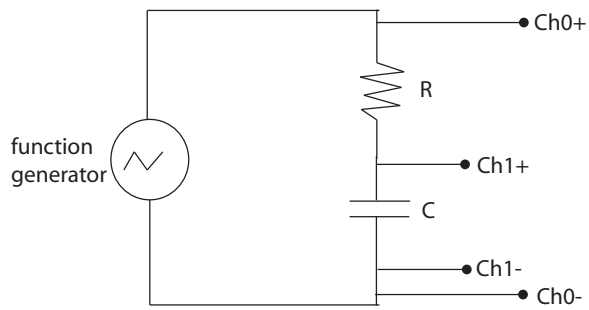

Figure 11: An RC circuit is connected to a function generator to measure the charging of the capacitor as a function of time.

station to verify the form of the square wave. Once the desired waveform is programmed, connect the signal to the aluminum break out box.

- Use the "Acquire waveforms (2 channels)" module, use CH0 of the data acquisition system to measure the input waveform (the voltage drop across the series combination of R and C), and use CH1 to measure the voltage on the capacitor.
- Set the sample rate and the total points of measurement so that one or two full periods are recorded and visible on the display. Observe how the voltage on the capacitor changes when the input voltage jumps from zero volts to its peak voltage. Save the data file.

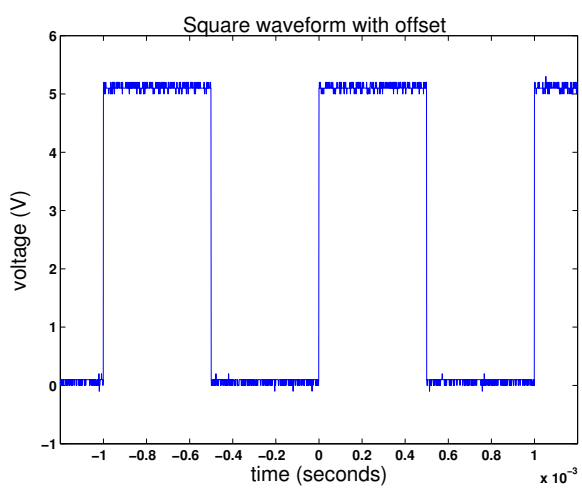

Figure 12: A square waveform is used as a impulse step-up voltage to study the transient of RC and RL circuits. The square wave is offset so that the lower voltage is at zero volts.

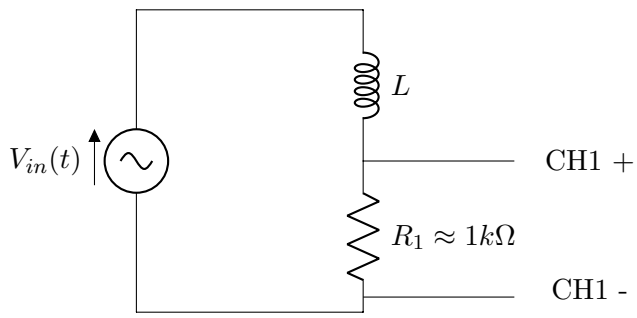

Figure 13: The RL circuit used to measure the transient state behavior of a resistor and inductor in series. Note that the inductor and resistor are in the opposite order as compared to the RC circuit.

RL Transient State Measurements

Now we will measure the time constant of an RL circuit, using a large coil of copper wire as our inductor. This coil is part of a setup, shown in Figure 14 , that will be used next week to test Faraday's law of induction. To select the 1500 turn option, connect the driving current into the red port, and out of the black port labeled "1500".

For the RL circuit, it is important to note that the inductor has some internal resistance of its own. We need to ensure that in building our RL circuit, that the ratio $R_{int}/R_{circuit}$ is small. This is done to minimize the effect the inductor's internal resistance has on the waveform. For the given coil, R_{int} is on the order of 10's of Ohms. To mitigate this, we place a larger resistor in series with the inducting coil, $R \approx 1k\Omega$ to create our RL circuit.

With a BNC splitter on the output of the function generator, send one output to the breakout box, and the other to CH2 of the oscilloscope. Have the scope triggered on the rising edge of the function generator signal, CH2.

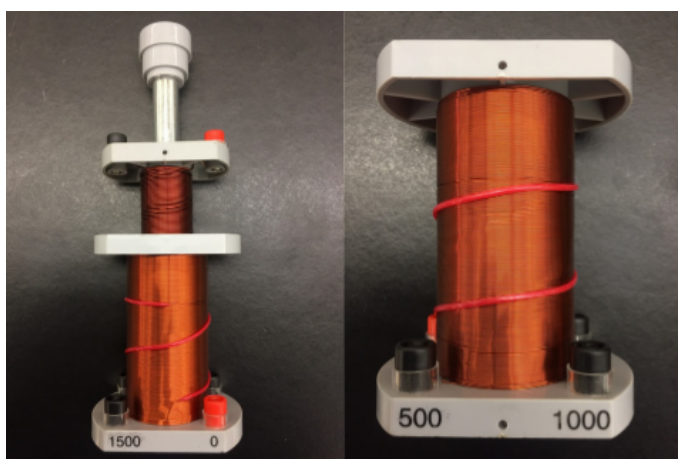

Figure 14: The Faraday coil setup: secondary coil (right) with option for 500, 1000, or 1500 turns. Primary coil with 175 turns that fits inside the secondary coil, and a ferromagnetic core that boosts the inductance of the coils. Only the secondary coil will be used for the RL circuit.

Build the RL circuit shown in Figure 13 using the signal sent to the breakout box. The driving signal will be identical to the one used to investigate the RC circuit, but the frequency may need to be adjusted. Using the scope, setup CH1 to measure the voltage drop across the resistor. This is effectively a measurement of the current coming through the inductor, related to the voltage drop across the resistor by Ohm's law.

The waveform from the function generator may appear rounded off or irregular, but this is okay and due to the inductor or possibly some internal capacitance in the scope. The current through the inductor is of the same functional form as the voltage across a capacitor, so it is expected that they will look nearly the same.

- While the inductor is charging, in a time equal to $t = \tau = L/R$, the voltage across the resistor (i.e. the current coming through the inductor) will reach 63.2% of V_b (or V_b/R in terms of current). Perform a quick calculation and write down what this voltage corresponds to. Then, open the *Cursor* menu on the scope, and select Time Cursors.
- By selecting either cursor 1 or 2 on the bottom right, each cursor can be moved horizontally with the multipurpose knob. Note that as you move the cursor, the highlighted tile for that cursor will display its position in time, as well as the voltage at which it intersects that signal's waveform.
- If the scope is properly triggered on the square wave, the rising edge should align with time $t = 0$ on the scope's display. Using the CH1 time cursor, identify how long it takes for the inductor's current to reach 63.2% of V_b/R.

Since the time constant of this circuit is small (order 10^{-5}) it is worth noting that determining τ with the MyDAQ would be much more challenging. The slow rate of digitization (as compared to $1/\tau$) would cause a loss of detail in the transient state behavior of the circuit. The oscilloscope is much better at handling fast signals.

Resonance of an RLC Circuit

Method 1 Next, you will build a RLC circuit, and measure the performance of the circuit as a function of frequency in two ways. For the first method, you will identify the resonance by eye using a function generator and the oscilloscope. The circuit you will build is depicted in Fig. 10, where V_{out} will be measured on CH1 of the oscilloscope. Choose a $1\mu F$ capacitor, the $1k\Omega$ resistor and use the secondary coil from the RL circuit (1500 turns).

To send V_{in} to the circuit, the breakout box will be needed. For measuring on the scope, we will have to convert the banana plug type connection to BNC connection for the scope. There should be a BNC to banana plug converter to attach to the scope's CH1 input. Then, build the RLC circuit with the secondary coil banana plug ports (i.e. put the resistor and capacitor directly onto the coil's ports).

Next, measure the potential difference across the resistor as shown in Fig. 10 (V_{out}) with two wires going to the banana to BNC converter on CH1.

Before driving the circuit, first look at the function generator signal on CH2 of the scope. We would like to setup the driving signal around resonance as to minimize the time it takes identify resonance. Use your value of τ from the RL circuit to estimate the inductance of the secondary coil at 1500 turns. Using your values of L and C, determine the theoretical resonant frequency. Then,

looking at the signal on the scope, ensure that you are applying a sinusoidal signal at a frequency around resonance (within a few hundred Hz). Turn the amplitude of the signal all the way up on the function generator, and use the measure function of the scope to determine and write down the peak to peak amplitude of the signal (twice the typical amplitude). We will be attempting to identify the frequency at which $|V_{out}|$ is maximized and should equal the amplitude of the driving signal (implying a gain G = 1).

Feed the function generator's BNC to the RLC side of the breakout box and setup the scope to measure the amplitude of V_{out}. While adjusting the driving frequency on the function generator, observe the amplitude response of V_{out} and identify the frequency at which the amplitude of V_{out} is maximized. This is the resonant frequency. Take note of potential sources of error, and how they could affect your experimental value of f_{res}.

Method 2 For the second method, you will use the BODE Analyzer in the MyDAQ software. A screenshot of the BODE software interface is shown in Fig. 16. This tool is located in the Instruments panel on the Windows toolbar. Select the BODE icon to start the software. The software's purpose is to drive an AC current through a circuit and measure the voltage response as a function of frequency. It graphs two quantities as a function of frequency, the voltage response gain (Eq. 14) and the phase (which we are not concerned with). The goal of this exercise is to find the resonant frequency for our circuit and determine its quality factor, Q.

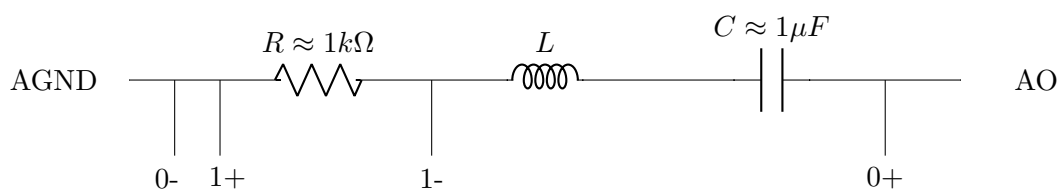

Figure 15: RLC circuit with values. Note the polarity of channels 0 and 1 of the MyDAQ are reversed with respect to each other. AO is the analog output (white) and AGND is the analog ground (green) from the MyDAQ

- Connect the MyDAQ channels as shown in Fig. 10. Connect the MyDAQ's white wire (analog output, AO) to the capacitor side of the RLC circuit, and the green wire (ground, AGND) to the resistor side. Note that the power for the circuit comes from the white wire in and is then grounded with the green wire. Be careful to make sure you are measuring the voltage properly over the correct elements with CH0 and CH1 of the MyDAQ.
- In the software adjust the options as you see fit in order to get a graph which will give you a good view of the resonance peak. This could possibly include the start/stop frequency, the number of steps or the peak amplitude. **Suggested settings:** mapping = linear, start frequency = 20 Hz, stop frequency = 20 kHz, steps per decade = 15.
- Once you have a clean graph that shows the resonant peak, save the data by using the Log button at the bottom right hand side of the panel. Import this data into Excel to do your data analysis.

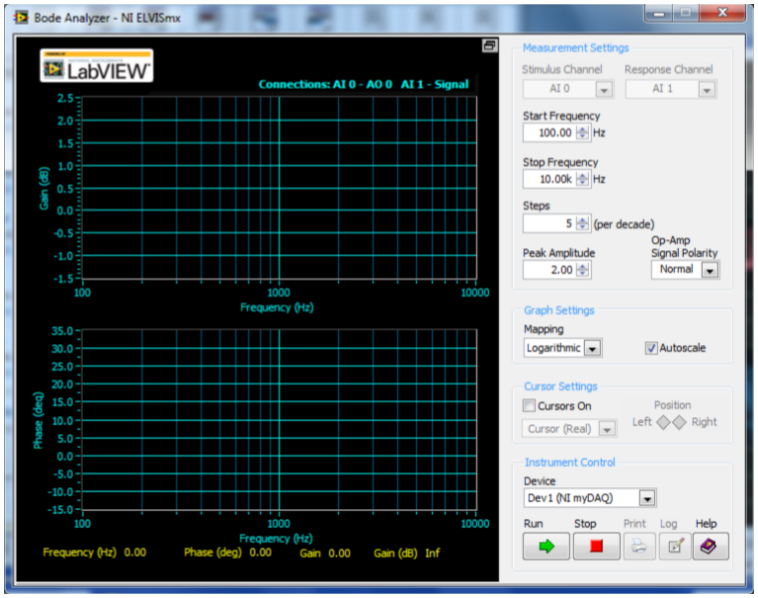

Figure 16:

Analysis

Transient Measurements

In the transient state measurements, you built and RC and an RL circuit and measured the voltage across the reactive component during the transient period. By performing a linear regression after the data is linearized, you can determine the characteristic time scales of the transient, $\tau = RC$ for an RC circuit. This analysis would be possible for the RL circuit as well if we had used the MyDAQ. You will be performing a linear regression for your RC data to determine the experimental value for $\tau = RC$, and determining the inductance of the secondary Faraday coil from the measured time constant.

- Load the RC circuit data into Excel. Column A is time, column B is Ch0 voltage which is the input square wave voltage, and column C is the voltage across the capacitor. The input square wave voltage is either at zero volts, or at the peak voltage, which we can denote by V_b. In your Excel file, find the *row* where the input voltage (column B) jumps from zero to V_b, and lets call this row i. The input voltage will stay at V_b for multiple rows until it drops back to zero. Find the last row where the voltage is at V_b and lets call this row j. In column D, copy the *time* (column A) from rows i to j. In column E, copy the *Ch1 voltages* (column C) from rows i to j. Columns D and E now contain the time and capacitor voltage for only the transient time period.

- Next, we are going to linearize the data as we did in the previous section, since the voltage on the capacitor has an exponential dependence (equation 8). In column F, calculate $V_b - V$ by subtracting column E from your value of V_b. In column G calculate $\ln((V - V_b)/V_b)$ by taking the natural log of column F. Equation 8 has now been linearized:

$$\ln\left(\frac{V_b - V}{V_b}\right) = -\frac{1}{RC}t$$

- Perform a linear regression with time (column D) as your x-values, and voltage (column G) as your y-values. The magnitude of the slope given by the linear regression is 1/RC. Invert this number to determine τ and compare with the values R and C you used in the circuit.

Resonant Circuit

The final task of your assignment was to build a resonant RLC circuit, and measure its performance as a function of frequency. To do this, you measured the peak-to-peak amplitude of the output voltage at different frequencies. At the circuit's resonant frequency, the output voltage was maximized. For analysis, you will compare your measured and theoretical values of f_{res} obtained through the two separate methods, and calculate a quantity called the quality factor, Q, which measures the sharpness of the resonance peak.

- Compare your measured value of f_{res} with the theoretical value $f_{res} = \dfrac{1}{2\pi\sqrt{LC}}$. Determine which method, 1 or 2, was better at identifying resonance by finding the percent error for each from the theoretical value.
- Calculate the circuit's Q-factor from method 2's data, which measures the width of the resonance peak and the power loss in the circuit. First, find the voltage V_{max} at f_{res}. Then calculate $V_{max}/\sqrt{2}$, and draw a horizontal line of this level on your graph. This line will intercept with your resonance curve at two points, with frequencies f_1 and f_2 respectively. Finally, the Q value of the circuit is determined as

$$Q = f_{res}/(f_2 - f_1).$$

Lab Assignment

For this lab assignment, the lab report and questions will together be worth 100 points. The report will be out of 60 points and the questions will be worth 40 points.

Lab Notebook

Keeping a thorough record of what was observed in the laboratory is essential. Often you will need to refer back to your notes to confirm measured values and procedures to look for errors. Answer the following questions in your lab notebook, and turn them into your TA before leaving the lab

1. In determining the resonant frequency of the RLC circuit, you used the BODE analyzer software to sample the gain of the circuit as a function of frequency. This relationship is of the form given in equation 14. The BODE software can sample frequencies ranging from 20 Hz to 20kHz. Suppose that you obtain a resonance curve that never peaks within this frequency range, but rather continues to increase until 19 kHz, and then just starts to level off around 20 kHz. Since there is not a clear maximum value of the gain, the resonant frequency cannot be determined. Supposing your only goal is to observe a resonance on this plot and you are already using the largest L and C available to you, how could you alter the circuit to observe a resonance within the sampling range of the BODE software? (recall that inductors add like resistors, and capacitors add opposite to resistors. Also assume the original resonance was just out of range of the MyDAQ, say 22 kHz).

2. You have two RLC circuits you are trying to scan for resonance using Method 1 from the lab. They have identical resonant frequencies, but circuit 1 has a very high Q factor ($Q_1 >> 1$), and circuit 2 has a very low Q factor ($Q_2 < 1$). Lets assume you are already on resonance and looking at V_{out} on the scope, and you change the frequency in either direction for both circuits. How will the amplitude response differ between circuits 1 and 2 as you move the driving frequency away from resonance?

Lab Report

For the lab report, you will be asked to present your data before and after manipulation, and explain important results. Additionally, you will write an introduction to the report. The focus of the report should be the data and explaining its significance. Emphasis on experimental design and procedure will come in later reports.

1. **Cover Page**
   - Descriptive title
   - Date the lab was performed
   - Your name, and your lab partners' names
   - Your TA's name and lab section
2. **Introduction**

   The introduction section explains, in your own words, the purpose of your experiment and how you will demonstrate this purpose. Try and be as brief as possible, yet still get your point across.
3. **Analysis**

   This section should present any calculations performed on the raw data, including uncertainties using propagation of errors. For each required item, briefly explain the data taken, present it in the most illuminating way possible, and analyze the results as succinctly as possible.

   You should include:
   - Graph of the linearized RC transient state data ($V_C(t)$). Explain the functional form and results of linear regression. Identify your experimental value for $\tau = RC$.
   - Statement of measured L/R time, with a brief description as to how it was attained.
   - Graph showing the output voltage (or gain) of the RLC resonant circuit as a function of frequency from the BODE program. Explain the functional form. Compare this resonant frequency with the one obtained by eye with the oscilloscope. In a couple sentences, explain which method you think is more accurate and why.
   - Compare your experimental and theoretical values of the resonant frequency and calculate the Q-factor of your resonant circuit.

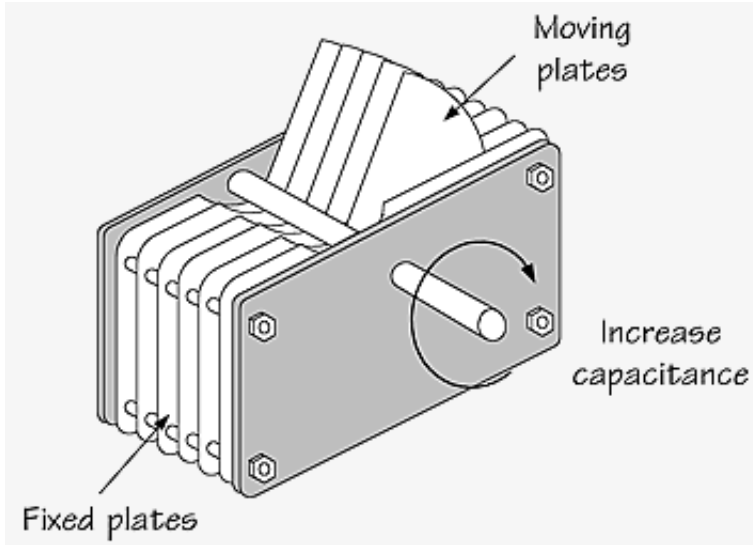

Figure 17: Diagram of a variable capacitor. The more the moving plates are rotated between the fixed plates, the higher the capacitance

Questions

1. This question is intended as in introduction to RLC resonant circuits. Suppose the antenna in your car can pick any signal in the radio frequency spectrum without loss ($f_{radio} \in$ [3 kHz, 300 GHz]). Further suppose that if you were to look at $V_{antenna}$ on a scope, you would see a signal that is a superposition of all these frequencies. To mitigate this, we can send $V_{antenna}$ through an RLC resonant circuit that has a very narrow resonance curve (high Q factor, Δf very small). This causes all frequencies other than a particular one at f_{res} to attenuate, effectively tuning the radio to the "f_{res}" channel. In order to tune the radio to listen to a particular channel, the RLC circuit has a *variable capacitor* in it whose capacitance changes as the radio tuning knob it turned.

   What range of capacitance must the variable capacitor need to be tunable over to be able to listen to the entire radio frequency spectrum, assuming the inductance in the circuit is $L = 1$ mH? In reality, most of the RF spectrum is reserved for specific purposes such as radiolocation, space research, the federal government, amongst other purposes. The FM radio spectrum ranges from 88 MHz to 108 MHz. Instead imagine now that the RLC circuit is composed of a single value capacitor (1μF) and a variable inductor. What is the inductance range necessary to tune into just the FM band?

2. A common use of capacitors as a reactive component is in a low-pass or high-pass filter, both of which contain a resistor and a capacitor. A low-pass filter is one that passes through signals with frequencies lower than a particular cutoff frequency and causes attenuation in signals of higher frequency. A high-pass filter is one that passes through signals with frequencies higher than a certain cutoff and causes lower frequencies to attenuate, giving the two configurations their names. The cutoff frequency for both circuits is given by $\omega_c = (RC)^{-1}$.

   In the interference lab later this quarter, a photometer will be used to convert light intensity measurements to voltages in order to digitize a double slit interference pattern. This device takes incoming photons, and converts them into a voltage proportional to the number of

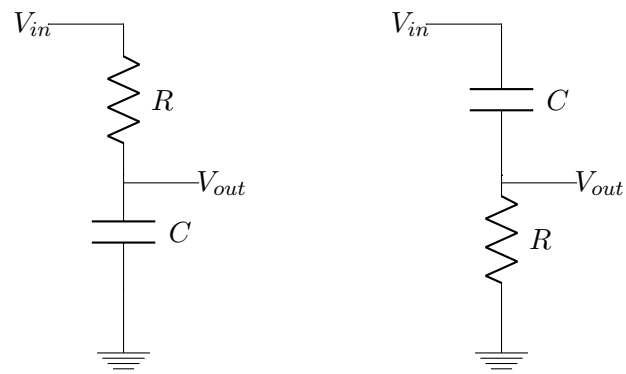

Figure 18: Low-pass filter (left) and a high-pass filter (right). Both V_{in} and V_{out} here are measured with reference to ground. That is, in measuring V_{out} with CH0 of the MyDAQ, CHO+ would connect to V_{out} and CH0- would connect to ground.

photons (which can be thought of as intensity). When using this device, the double slit pattern will be scanned very slowly, so that the voltage signal coming from the photometer changes slowly. Unfortunately, the photometer output has a lot of residual noise coming from the outlet it is plugged into (120V, 60 Hz AC with noise superimposed at much higher frequencies of order kHz or MHz). Given this, which type of filter should be used to filter the photometer output before allowing the MyDAQ to measure the signal? Suggest a set of values of R and C, assuming that the signal we care about has a frequency of about 3 Hz.

Additionally, suppose we have a noisy signal (superposition of many frequencies), but we are only concerned with a particular part of the signal within the noise at a frequency $f_{desired} =$ 1 GHz. In a sentence or two, explain how you could isolate the desired part of the signal in the context of this problem. Assuming the noise is far from the desired signal in frequency ($\geq \pm$ 200 MHz from $f_{desired}$), suggest component values that should achieve this effect.

Laboratory 4: Magnetism

Background information

In this laboratory exercise you will make measurements of magnetic fields generated by steady state sources. By using a device called a Hall probe, you will measure the spatial dependence of the magnetic fields and verify the theoretical predictions. You will also investigate the coupling of magnetic and electric fields predicted by Faraday's Law using a time-varying source of magnetic fields. Not all measurements will be required in your report, so be sure to make thorough notes in your lab notebook to receive credit for completing these sections.

Magnetic Fields Produced by Currents

The Biot-Savart law gives the magnetic field for any known current distribution. Ampère's law can also be used in situations of high symmetry. In the case of a long, straight wire carrying a current I directed along the z-axis, both calculations yield an azimuthal magnetic field of magnitude

$$B_\varphi = \frac{\mu_0 I}{2\pi\rho} \tag{15}$$

where $\mu_0 = 4\pi \times 10^{-7}$V-s/A-m is the permeability of free space and ρ is the radial distance from the line current.

In a real experiment an infinitely long line current cannot be created. All DC currents have to be closed and a second return-current carrying conductor is required. This can be accomplished with two coaxial cylindrical conductors, which preserves the axial symmetry. At the ends of the cylinders the current has to close radially. In the cylindrical gap between the conductors the field is the same as for an infinitely long line current on axis. Instead of passing a large current through a single solid conductor it is more practical to use a small current and make the conductors out of thin wires with a large number of turns. Thus a toroidal coil with N=100 turns has been built, and is shown in figure 19. In this section of the present assignment, you will use a Hall probe to measure the spatial dependence of the magnetic field produced by the toroid to verify equation 15, and determine the permeability of free space.

The inner radius is a=3.2 cm, the outer radius is b=18 cm, the axial height is h=46cm. The wire spacing of about 1 cm allows one to insert the Hall probe radially, and a hole allows access to the center.

Magnetic Fields Produced by Permanent Magnets

In this section you will investigate the magnetic field produced by a permanent magnet. In this type of material the dipole moments associated with electronic spins all align in a common direction, producing a magnetization (dipole moment per unit volume) $\mathbf{M} \neq 0$. Let's consider the case where the magnetization is uniform throughout a volume V. Then the total dipole moment $\mathbf{m}$ in V is simply given by

$$\mathbf{m} = \int_V \mathbf{M} dV.$$

At distances $|\mathbf{r}|$ much larger than the linear dimensions of V, the magnetic field generated is very well approximated by that of a dipole moment $m = |\mathbf{m}|$ directed along the z-axis. If we write this

Figure 19: A toroidal coil produces a magnetic field identically to that of an infinitely long straight current. Making the conductors out of multiple turns of thin wire allows access to measure the field at all radial positions.

field in cylindrical coordinates as $\mathbf{B} = B_\rho \hat{\rho} + B_\varphi \hat{\varphi} + B_z \hat{z}$, then we find that

$$B_z = \frac{\mu_0}{4\pi} \frac{m}{r^3} (3\cos^2\theta - 1) \tag{16}$$

$$B_\rho = \frac{\mu_0}{4\pi} \frac{3m}{2r^3} \sin 2\theta \tag{17}$$

where θ is the angle measured from $\hat{z}$ (the polar angle), and $\hat{\rho}$ is the unit vector directed radially in the XY plane. The distance from the magnet geometric center is $r = \sqrt{\rho^2 + z^2}$. We will be measuring the magnetic fields at $\theta = 0°, 90°$ which leads to $B_\rho = 0$ so we will only measure z-components of the field.

A cylindrical ferrite magnet (2 cm diam, 2.5 cm long) which is axially magnetized is supplied for studying its properties. $\mathbf{B}$ is directed outward from a physical north pole (note that the geophysical north pole is a physical south pole). The magnet is mounted on a nonmagnetic circuit board and plugs vertically into the aluminum connector box used only for support. The magnet is shown in figure 20. Using the Hall probe, you will measure the spatial dependence of the field produced by the permanent magnet and verify the given equations.

Force Between Magnets

We have shown in the previous section that at distances far from a permanent magnet, $\mathbf{B}_{magnet}$ decays as quickly it would for a dipole moment. The energy of interaction between two dipole

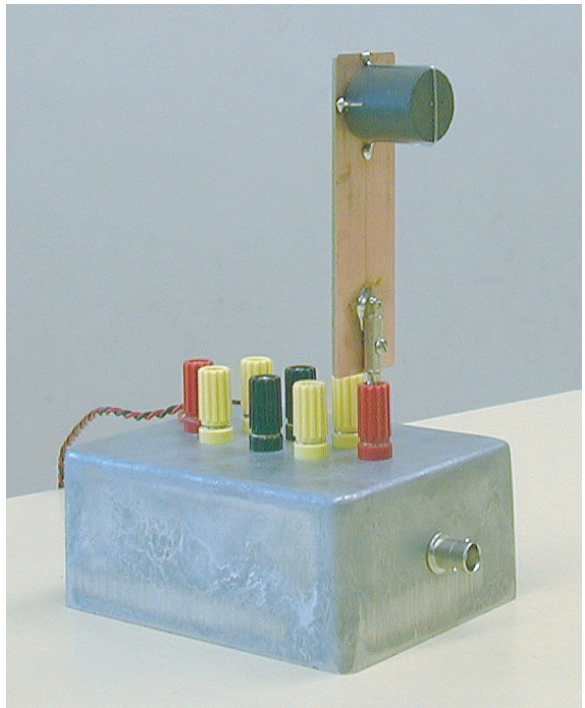

Figure 20: a permanent magnet produces a B-field which, at large distances as compared to the magnet size, can be approximated as a dipole field.

moments $\mathbf{m_1}$, $\mathbf{m_2}$ is given by

$$U = -\mathbf{m_1} \cdot \mathbf{B_2} \tag{18}$$

where $\mathbf{B_2}$ is the B-field produced by dipole $\mathbf{m_2}$. This field takes the form given in the previous section. The force between the two magnets is calculated using

$$\mathbf{F} = -\nabla U. \tag{19}$$

Since the magnetic field produced by a dipole varies as $B \propto r^{-3}$ (equations 16 and 17) the force between two dipoles should vary as $F \propto r^{-4}$. You will verify this spatial dependence of the force between two dipoles.

Faraday's Law

One of the four Maxwell's equations is Faraday's Law, describing the fundamental effect of magnetic induction. In differential form, it reads

$$V_{ind} = -\frac{d\Phi}{dt} \tag{20}$$

where V_{ind} is the induced potential difference in a loop and Φ the magnetic flux through one loop. If your loop has N turns the induced voltage will be

$$V_{ind} = -N\frac{d\Phi}{dt}.$$

Here we will verify that this expression scales with the number of turns in the secondary coil. We use a large coil (N=500, 1000, or 1500 turns, wrapped around a plastic cylinder), into which we insert a known amount of magnetic flux. This is done by inserting a smaller solenoid (with N=175 turns, 34 mm diameter, and 100 mm in length) inside of the coil and driving a current through the inner solenoid. The current will vary sinusoidally:

$$I(t) = I_0 \sin(\omega t)$$

The strength of the magnetic field inside a solenoid is approximated as (since this assumes an infinite solenoid)

$$B = \mu_0 n I \tag{21}$$

where n is the number of turns per length and I is the current in the solenoid. The flux inside the larger coil will be changing in time due to the time-varying current through the smaller coil, and thus a voltage will be induced in the larger coil. You will measure this induced voltage, whose magnitude we can calculate using equations 20 and 21 and knowledge of the dimensions of the coils. The result is (verify this for yourself):

$$V_{ind} = I_0 \mu_0 \omega A n N \cos(\omega t) \tag{22}$$

where A is the cross sectional area of the smaller coil, I_0 is the amplitude of current in the smaller coil, n is the turns per length of the smaller coil, and N is the number of turns for the larger coil.

Magnetism in Materials: Paramagnetism and Diamagnetism.

We have already worked with some permanent magnets in the previous section; the materials producing those fields are classified as ferromagnets, and the phenomenon is called ferromagnetism. Most materials do not retain a permanent magnetic moment producing a field. However, even where no permanent moment is observed, magnetic moments are induced when a material is placed into a magnetic field. Generally, we consider two possible responses: (1) The induced moment aligns with the magnetic field (paramagnetism). (2) The induced moment anti-aligns with the magnetic field (diamagnetism). All magnetism in matter is quantum mechanical. The distinction between ferromagnetism, paramagnetism, and diamagnetism lies in the origin: usually paramagnetism is produced by the coupling of electronic spin angular momenta to the magnetic field, and diamagnetism is associated with the coupling of electronic orbital angular momenta to the magnetic field. Ferromagnetism arises when there is an interaction between spins that otherwise would be paramagnetic.

In this section, we will examine a few sample materials for signatures of paramagnetism and diamagnetism. This will be done by measuring the sense of the force between a permanent magnet, and either a paramagnetic or diamagnetic test sample. In one case the force is attractive, and in the other it is repulsive. Let's start with a permanent magnet of total dipole moment $\mathbf{m}$, located at $\mathbf{r}$. When it is nearby to a sample S, the field $\mathbf{B_m}$ from $\mathbf{m}$ *induces* a moment $\mathbf{m_S}$ in S. Then, as before, the potential energy associated with this is given by

$$U = -\mathbf{m_S} \cdot \mathbf{B_m}.$$

For the paramagnet, $\mathbf{m_s} \parallel \mathbf{B_m}$, so U becomes more negative as $|\mathbf{B_m}|$ grows larger. Recall that the force will be in the direction for which U decreases most quickly. That is,

$$\mathbf{F} = -\nabla U,$$

and thus, the paramagnet is always attracted to the permanent magnet.

In weak fields, the induced moment of a paramagnet or a diamagnet is proportional to the magnetic field in which the material is placed; for this case, we have:

$$\mathbf{M} = \frac{1}{\mu_0}\chi\mathbf{B}, \tag{23}$$

where χ=constant is the magnetic susceptibility. You will be provided a set of materials and it is your task to determine which are diamagnetic and which are paramagnetic.

Experimental Setup

To measure magnetic field strength, you will use a Hall probe Gaussmeter. The Gaussmeter (F. W. Bell, Model 5080) consists of two components, (i) a Hall probe and (ii), an electronic instrument with power supply and electronics to convert the analog Hall voltage into a calibrated digital readout. The device is shown in figure 21.The principle of a Hall probe is the following: A dc current flows through a semiconductor Hall element in the x-direction. When a magnetic field is applied in the y-direction a charge separation occurs and produces a voltage drop along the z-direction. This Hall voltage is proportional to B and is calibrated in Gauss.

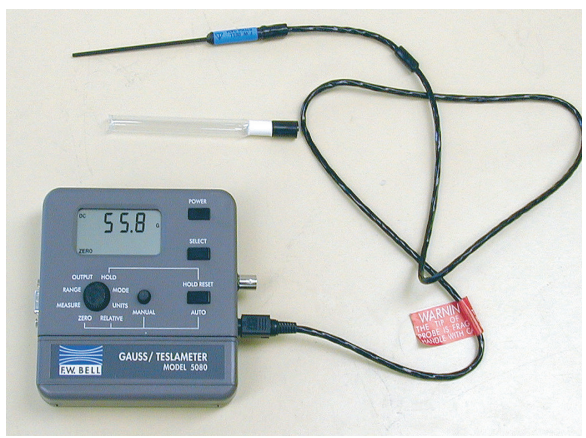

Figure 21: The Gaussmeter consists of a Hall probe (thin filament) and the digital electronics. Be careful in that the Hall Probe is a fragile and expensive device.

The use of the Gaussmeter is straightforward but requires some important information: Caution! The Hall probe is very fragile. Do not touch or bend the probe tip, which contains the sensor element. Just hold the probe in the vicinity of current- carrying wires or magnets without touching them. Note that the Gaussmeter probe is a transverse probe, which measures the field component normal to its axis and perpendicular to its flat side. Rotation around the probe shaft will give a sinusoidal variation of the readout. The Hall element is located at the tip of the probe. Become familiar with the properties of the instrument by reading the instruction manual, especially the warning signs.

Before taking a measurement, place the Hall probe far from any sources of magnetic fields and zero the probe to remove the contribution due to the Earth's magnetic field. To do this, rotate the knob to the "zero" position and press the "Reset" button. When the readout settles on a null measurement, return the knob to the "measure" position. Some measurements require measuring

the field along one direction. This is accomplished by mounting the probe on a linear track, which is shown in figure 22. The probe is held with alligator clips on a small stand bolted to the movable table of the track. Clamp one alligator clip onto the round shaft covered in blue tape (DO NOT CLAMP THE FILAMENT ITSELF!), the other on the flexible cable covered by black tape. Adjust the stand so as to measure the desired field component in the desired direction.

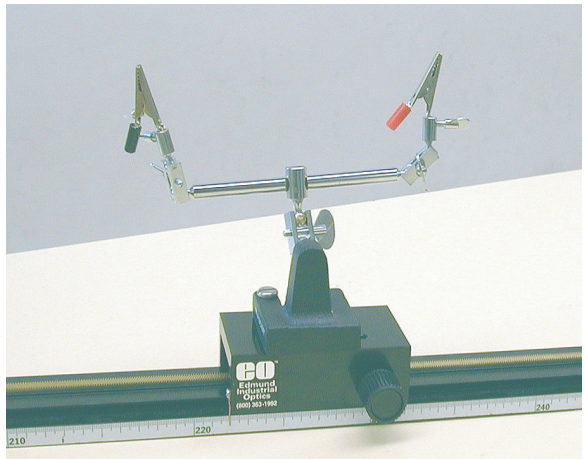

Figure 22: A linear track is used to incrementally move the Hall probe along a direction. The Hall probe is attached to a linear track by clipping the probe with alligator clips. Clamp one alligator clip onto the round shaft covered in blue tape (DO NOT CLAMP THE FILAMENT ITSELF!)

Procedure and Measurements

Magnetic Fields Produced by Line Currents

We will be modeling the magnetic field of an infinite current carrying wire with a finite toroidal current distribution whose magnetic field is identical to that of an infinite wire within its volume. First, measure the resistance of the coil with the multimeter. Then apply around 15-20V, to the coil from the DC power supply. If the power supply overloads (indicated by the red light turning on and the voltage supplied going to zero), increase the current limit and/or use a smaller voltage $\approx 10V$ is fine. Write down the applied voltage so the current in the toroid can be calculated.

Next, verify that the magnetic field between the axial conductors is in the azimuthal direction ($\hat{\varphi}$) as predicted by the current flow. To do this, carefully hold the probe in the region between the two conductors by hand. Rotate the Hall probe to measure the different components of the magnetic field, remembering that the Hall probe only measures the component of B perpendicular to the flat surface of the filament. Which direction do you need to orient the Hall probe to maximize the reading?

Now measure the radial dependence $B_\varphi(r)$. Note that inside the inner conductor ($r < a$) the field vanishes since no current is enclosed. Between the conductors (a < r < b) verify that $B \sim r^{-1}$, and outside the outer conductors (r > b) the field vanishes since there is no net enclosed current. To do this, align the linear track so that the Hall probe moves along the radial direction. Note that there is a hole in the black plastic cylinder of the toroid. This is provided so that the Hall probe can reach the inner region of the toroid (which is inside the inner copper wires). Be sure to align the linear track so that the Hall probe can enter this hole as you take your radial measurements.

Measure the azimuthal field at about 20 to 25 positions of equal spacing (every 0.5cm is suggested), starting inside the inner conductor and finishing outside the toroid. The ruler attached to the side of the linear track can be used to measure *changes in position*. At home, you'll need to convert this distance into the actual radial distance, which you can do with the knowledge that the inner conductor is at a radius of 3.2cm and this is where the maximum magnetic field should occur. Record the position and field strength in your notebook.

Magnetic Fields Produced by Permanent Magnets

You will measure the magnetic field produced by the permanent magnet, and verify the field profile is that of a magnetic dipole. The z-axis is defined along the symmetry axis of the cylindrical magnet as shown in figure 23. You will measure the spatial dependence for two cases: $\theta = 0$ degrees and $\theta = 90$ degrees. For the two cases, you are to verify the field is in the correct direction and that the field strength decreases with distance as described by equations 16 and 17.

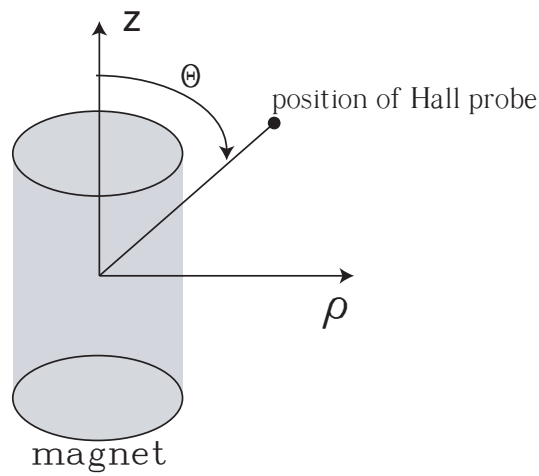

Figure 23: Orientation of the permanent magnet. The z-axis is defined along the symmetry axis of the magnet.

- Measure $\mathbf{B_z}(\Theta = 0°, z)$, i.e. along the z-axis. To do this, align the Hall probe on the linear track so that the motion of the probe is along the z-axis as defined above, and so that the Hall probe is measuring the z-component of the field. Measure the field strength at 10-20 distances starting a few cm away from the top surface of the magnet to verify the field dependence $B_z(z) \sim r^{-3}$. The ruler on the side of the linear track can be used to measure changes in position. Measure the starting distance between the probe and magnet with the ruler provided, and use this as the offset position. You can change the sensitivity of the probe from Gauss to kGauss if needed.
- Measure $\mathbf{B_z}(\Theta = 90°, \rho)$ by aligning the linear track so that the Hall probe moves in the radial direction and measures the z component of B, as defined in the figure. Start with the

Hall probe a few cm away from the side of the magnet (again measure this offset position with your ruler), and measure the field strength for 10-20 positions along the radial direction. **Note:** It is really important that you begin your measurements several cm away from the edge of the magnet! Data too close to the magnet will not follow the radial dependence.

Compare your results to expectations based on Eq. 16.

Force Between Magnets

Next, you will measure the force between two permanent magnets as the distance of their separation is varied to verify the functional form. The force can be measured by placing one of the magnets on a scale. The readings of a scale can be converted from mass to force using the acceleration due to Earth's gravity, however this will not be necessary as we are only verifying the functional form as opposed to the exact value.

Figure 24: The setup to measure the force between two permanent magnets as the distance separating them is varied.

- Use two identical permanent magnets (2 cm diam, 2.5 cm long). Place one of them on a digital scale and null out its weight. The second magnet is attached to a circuit board, which you can mount into the linear track with the alligator clips. Clamp the linear track in the sturdy vise so that the magnet can move in the vertical direction. Note that there is a screw in the linear track which, when tightened, prevents the track from moving. The setup is shown in figure 24.
- Align the magnets axially with equal poles facing each other so that they repel. Notice that the weight increases. Do not exceed the weight limit of the scale (200 grams maximum.).

Vary the dipole separation for 10-20 different positions and measure the force on the magnet, which can be done by converting the reading of grams into force. Measure the offset distance, which can be either the closest or farthest separation, with a ruler.

Magnetism in Materials: Paramagnetism and Diamagnetism

The setup is as follows: Clamp a stainless steel rod into the vise. Attach the nylon string through the slit at the upper end of the rod and make a few extra turns to adjust the length of the torsional pendulum. The height should be such that the diode laser beam strikes the mirror above the magnet. The magnet should be freely rotating above the table. Place the copper conductor about 2 cm from and parallel to the broad side of the magnet to dampen the oscillations. Place a screen such that the reflected laser beam is in its center. Keep all iron and permanent magnets far away from the sensitive measurement device. Refer to figure 25.

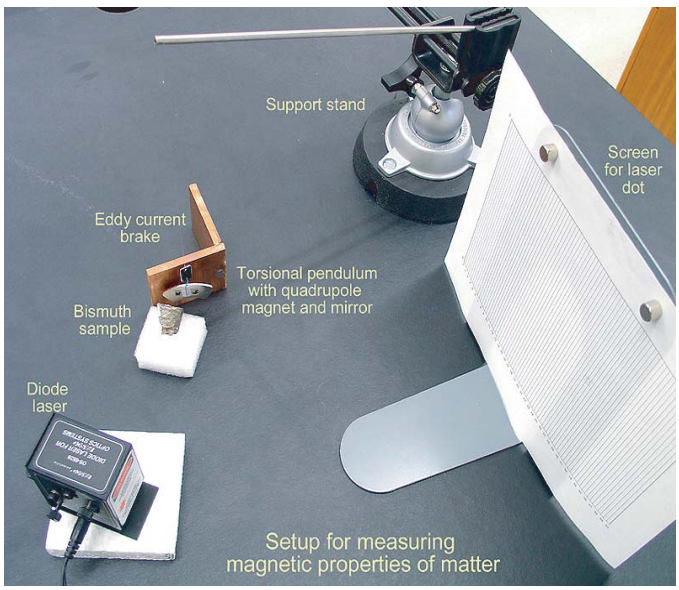

Figure 25: Setup for determining whether a material is paramagnetic or diamagnetic.

After the equilibrium position has been established place a magnetic material on a Styrofoam support and move it slowly to about 0.5 cm from one of the magnet poles. Observe the rotation of the magnet, which is greatly magnified by the motion of the laser spot. If magnet and matter attract the latter is paramagnetic, if they repel it indicates diamagnetism. You are supplied with a variety of magnetic materials (Cu, Al, Ta, Bi, C, Fe, Ni, glass, rocks, etc).

Determine whether they are paramagnetic or diamagnetic. And record the results in your lab notebook. You will not be including this section in your lab report so comment thoroughly in your notebook to receive credit. The setup is very sensitive and you can measure the diamagnetism of your finger! (why you are diamagnetic?). Please handle the delicate setup with great care: Do not touch the quadrupole magnet with iron objects or other magnets, do not touch the mirror surface with your hands, do not pull hard on the nylon string (2lb. fishing line). And of course, never look straight into the laser beam.

Take the thin piece of pyrolytic graphite and place it on the magnet array. The magnets are arranged with alternating vertical N and S poles in a checkerboard pattern. Pyrolytic graphite

has the highest diamagnetic susceptibility per density, making it the easiest material to levitate with no required energy input. A typical susceptibility χ for pyrolytic graphite perpendicular to its layered side, is -450 $\times 10^{-6}$. What this means in terms of equation 23 is that in the presence of an external field B, the diamagnetic material develops a field χB, or only 0.045% of the external field. For this reason, the diamagnetic effect is considered weak and barely effects the external field. A superconductor acts like a perfect diamagnet with a susceptibility $\chi = -1$. A superconductor can cancel out external fields at its surface.

Faraday's Law

In this section, you will verify the expression for Faraday's law as explained in the introduction section scales linearly with N. To do so, you will drive a time varying current through the primary coil and measure the induced voltage in the outer coil. You will measure both the current through the inner coil and the induced voltage in the outer coil with the oscilloscope.

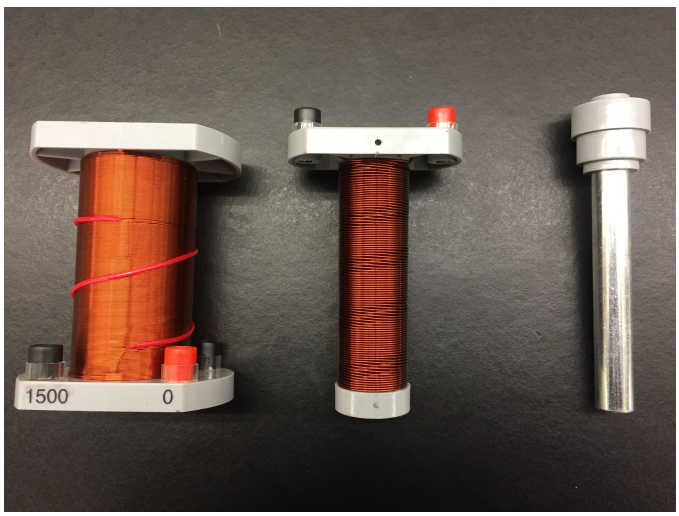

Figure 26: From left to right: secondary coil with 500, 1000, or 1500 turns, primary coil with 175 turns, and the ferromagnetic core.

- Insert the solenoid into the Faraday coil and apply a $\sim 1kHz$ sine wave to it. You will also need to place a 10Ω resistor in series with the primary coil to measure the current going through the solenoid.
- Measure the maximum current through the primary coil with CH1 (by measuring the maximum voltage across the 10Ω resistor) and the maximum induced voltage in the outer coil on CH2. Do this using the oscilloscope's measuring functions, and measure the maximum induced voltage for $N = 1500$, 1000, and 500 turns.
- Insert the ferromagnetic core for each N, and record the maximum induced voltage in the secondary coil.

Analysis

In the previous laboratory exercise, you learned how to perform a linear regression on a set of experimental data. You measured N pairs of measured quantities x and y (x_1, y_1),...,(x_N, y_N) and assumed they were linearly related: $y_i = mx_i + b$. The linear regression analysis then provided you with best-guess estimates of the two fitting parameters m and b, as well as the uncertainty in these best-guesses σ_m and σ_b.

In the present assignment, you will learn an additional feature of the linear regression analysis called the *correlation coefficient*. The correlation coefficient, denoted by r, tells you how *well* the variables x and y are linearly related. The value of r ranges from 0 to 1, and the closer r is to 1 the better x and y are linearly related. Thus, if all your data points fit exactly on the linear fit, the r value will be vary close to 1. Conversely, if the data points deviate significantly from the linear fit, the r value will be close to zero. From your measured values of x and y, the correlation coefficient is calculated as:

$$r = \frac{\sum(x_i - \overline{x})(y_i - \overline{y}}{\sqrt{\sum(x_i - \overline{x})^2 \sum(y_i - \overline{y})^2}} \tag{24}$$

where $\overline{x}$ and $\overline{y}$ are the average values of the N x_i and y_i. For further details on this equation, see chapter 9 of John Taylors Introduction to Error Analysis, 2nd edition.

For the present laboratory assignment, you are asked to determine how well your experimental data agrees with theoretical predictions. For example, in the first section, you measure the magnetic field produced by a line current at different radial positions and are to compare with the theoretical prediction that $B \propto r^{-1}$. To do this, you will linearize your data, perform a linear regression, and then see how close the correlation coefficient is to 1. Note that there is a systematic way to determine how close r must be to 1 in order to claim the two variables are linearly related, and you can refer to John Taylors Introduction to Error Analysis, chapter 9 for details. However for this class, simply comment on the magnitude of r to interpret the strength of your linear fit.

Magnetic Fields Produced by Currents

In this section, you measured the magnetic field produced by a toroid in three regions: inside the inner coil $r < a$, in between the two coils $a < r < b$, and outside the outer coil $r > b$. For the middle region, we expect the field strength to be related to the position by equation 15. To verify the 1/r dependence, calculate the correlation coefficient, which can be calculated by equation 24, or done in excel by performing a linear regression. To do so, insert your values for the B-field strength in column A of an Excel file, and the radial position of the measurement in column B. Next, linearize the data by calculating 1/r in column C (i.e. divide 1 by the values in column B). Then, performing a linear regression with column C as the x-values and column A as the y-values will evaluate the equation

$$B(x) = \frac{\mu_0 I}{2\pi} x$$

where $x = 1/r$. In the linear regression output, the square of the correlation coefficient r^2 is given. Comment on the correlation coefficient of the linear regression as to whether the magnetic field does in fact vary as 1/r for the middle region of the toroid.

With the results of linear regression, determine an experimental value for the permeability of free space, μ_0.

Faraday's Law

In this section, you measured the voltage induced in a coil of wire due to a time varying flux through the coil at three different secondary coil sizes. The time varying flux was created by driving a sinusoidal current through a solenoid which was placed inside the coil. You also measured this current, by placing a resistor in series with the solenoid and measuring the voltage drop across this resistor.

Determine the ratio of $V_{ind,1500}$ to the maximum induced voltage on the 1000 and 500 turn settings. For each N, also calculate the amplification caused by inserting the ferromagnetic core. Comment on the results and why there is a turn dependence of the induced voltage.

Lab Assignment

For this lab assignment, the lab report and questions will together be worth 100 points. The report will be out of 70 points and the question will be worth 30 points.

Lab Notebook

Keeping a thorough record of what was observed in the laboratory is essential. Often you will need to refer back to your notes to confirm measured values and procedures to look for errors. Answer the following questions in your lab notebook, and turn them into your TA before leaving the lab

1. The device you used to measure the magnetic fields is called a Hall probe, which relies on the magnetic field inducing a voltage across the strip at the end of the detector to determine the magnetic field strength. As a result, if you are measuring a field and it reads as a positive value, if you rotate the detector by 180° the field reading should be negative with identical magnitude ($|\mathbf{B}| \rightarrow -|\mathbf{B}|$). The permanent cylindrical magnet you used is essentially the same: if you are measuring the field at some point, and flip the magnet 180° (north pole to south pole, or vice versa) the Hall probe should measure the field to have equal magnitude with a negative sign. So when you measure the magnetic field of the permanent magnet, you can't tell what direction the dipole moment of the magnet is with just the Hall probe. But, with other items in the lab, you could figure this out. How do you think you could do this? (consider ways to determine the polarity of the Hall probe)

2. Imagine we took the inner solenoid from the Faraday's Law experiment and doubled its radius ($r' = 2r$), keeping all other physical parameters fixed. What would you expect the ratio V'_{ind}/V_{ind} to equal? In reality other factors might change as well. Which other factor in equation 22 would you expect to change and why?

3. What was the amplification factor produced by inserting the ferromagnetic core into the primary coil? Here we will define the amplification factor as the ratio of max induced voltages with and without the core.

Lab Report

For the lab report, you will be asked to present your data before and after manipulation and explain important results. The focus of the report will be presenting and explaining data for the toroidal magnet, and presenting results from the Faraday's Law portion of the lab. All sections should be

written assuming only these two portions of the lab were performed, ignoring the other experiments performed during the lab session.

1. **Cover Page**
   - Descriptive title
   - Date the lab was performed
   - Your name, and your lab partners' names.
   - Your TA's name and lab section

2. **Introduction**

   The introduction section explains, in your own words, the purpose of your experiment and how you will demonstrate this purpose. Try and be as brief as possible, yet still get your point across.

3. **Experimental Results** This section should briefly explain what was measured and how the data was collected (dia- grams of the experimental set up may be helpful), present the raw data in graphical form (if possible) including uncertainty values with all numbers. Your graph should include labels on both axes that include units. Label your graphs as Figure 1, Figure 2, etc, so that you can refer to them in your text. In the text, explain the meaning of the variables on both axes and include an explanation that makes it clear to the reader how to interpret the information displayed on in the plots. Along with a description of the experimental setup, your report should contain:

   - Description of toroidal magnetic field measurement, with plot of linearized $|\mathbf{B}|$ vs ρ data. Briefly explain how the radial distance was adjusted to match up with the dimensions of the physical toroidal magnet.
   - Table of $V_{ind,turn\#}$ values, amplification factors, and I_0.

4. **Analysis**

   This section should present any calculations performed on the raw data, including uncertainties using propagation of errors. Example: if you are testing Ohm's Law $V = IR$, and you measured V and R, then here you calculate I. If you have a theoretical value for your calculated quantity (I in this example), state whether it is within your uncertainty range. Also, answer any questions proposed in the lab manual.

   You should have:

   - Perform a linear regression of the linearized toroidal magnet data to determine the correlation coefficient and the value of the slope with error. Using the value of the slope, determine an experimental value of the permeability of free space, μ_0, and compare to the known value.
   - Compare measured and theoretical ratios of the induced voltage on the Faraday coil. Comment on potential sources of error, especially if results do not match well with expected results.

5. **Conclusion**

   State how your results demonstrate (or fail to demonstrate) the objectives you presented in the introduction section.

Questions

1. Superconductors are materials that when cooled down to sufficiently low temperatures can operate with effectively zero resistance. They have many fascinating properties, including the repulsion of external magnetic fields. That is, if you place a superconductor that is superconducting in a magnetic field, it will induce currents on its surface to perfectly cancel out the external field within its volume. This will cause permanent magnets that are small enough compared to the superconductor to float above the superconducting surface, called the Meissner effect. You will calculate the levitation height of the small permanent magnet.

   Suppose you place a magnetic dipole with dipole moment $\mathbf{m_1} = m_1\hat{z}$ and mass M a distance z_o above the surface of a superconductor (which in this problem fills the entire volume below the xy plane), and it levitates at this height. This effect can be modeled in a similar way as image charges in electrostatics: just imagine the superconductor is not there, and place another magnetic dipole $\mathbf{m_2} = \pm m_1\hat{z}$ at z_o below the surface of where the superconducting plane used to be.

   To determine the height z_o, you must determine the force that $\mathbf{B_2}$ exerts on the real dipole, $\mathbf{m_1}$ through equations 16, 18, and 19. Then note that this force *must* be balancing out the gravitational force on the dipole. Which direction of the image dipole, $\mathbf{m_2}$ will cause an upward force on $\mathbf{m_1}$? After determining the direction of $\mathbf{m_2}$, derive an expression for the height z_o in terms of the given and fundamental constants.

Laboratory 5: Speed of Sound and Light

Background Information

In this laboratory exercise, we will measure the speed of two most commonly encountered waves: sound waves and electromagnetic waves. A microphone will be used to detect sound waves and a photodiode to detect laser light. You will use the oscilloscope to make your measurements. The lasers used in this lab are low power and not normally dangerous. However, use good laser safety protocols. Do not look directly into laser light or aim it in such a way it could get in someone's eyes. There are handheld lasers powerful enough to blind you instantly.

Sound Waves

Sound waves propagate in matter with speeds depending on the mode of propagation and properties of the medium. For instance, only longitudinal waves propagate through gases and liquids, and the speed is typically much less in gases. Solids will carry transverse waves, as well as longitudinal. In our own experience, we are most familiar with sound in air; human hearing is sensitive to waves of characteristic frequencies covering the approximate range f=20 Hz-20 kHz. In science and technology, we use devices called transducers (microphones and speakers) to excite/detect non-audible sound for research and applications (sonars in oceanography or submarine warfare, seismic waves in geophysics, echograms in medicine, etc). Thus, the knowledge of sound waves is important in many areas of modern life.

Plane monochromatic waves are described by the expression

$$\mathbf{A}(\mathbf{r}, t) = \mathbf{A}\cos(\mathbf{k}\cdot\mathbf{r} - \omega t + \phi),$$

where $\mathbf{k}$ is the wavevector, $\omega = 2\pi f$ is the angular frequency, and $\mathbf{r}$, t are the spatial and time coordinates. The direction of propagation is determined by $\mathbf{k}$; arbitrarily defining it to be along the x-axis results in

$$\mathbf{A}(\mathbf{r}, t) = \mathbf{A}\cos(k_x x - \omega t + \phi),$$

where $\mathbf{k} = k_x\hat{x} + k_y\hat{y} + k_z\hat{z}$ and $k_y = k_z$=0. Note that the polarization of the wave is determined by $\mathbf{A}$.

We quantify the rate at which a wave is traveling with the phase velocity. This is the rate at which wave's phase propagates through space. The phase velocity is calculated as:

$$v_p = f\lambda$$

where f is the frequency of the wave and λ is the wavelength. In terms of the angular frequency ω and the wavevector k, this expression becomes

$$v_p = \frac{\omega}{k}.$$

By measuring the frequency and wavelength of a sound wave, you will be able to determine the phase velocity of sound traveling in air.

Sound waves traveling through air are also non-dispersive. This means that all frequencies travel at the same velocity. A prism is an example of a dispersive medium: when light travels through a prism, the different frequencies (and thus the different colors) that make up white light travel at

different velocities. This is what enables you to see the spectrum of visible light (red to violet)from a white light source. You will demonstrate that sound waves traveling through air are non-dispersive by measuring the velocity of sound for different frequencies.

Electromagnetic Waves

Electromagnetic waves propagate in free space (vacuum) at the speed of light, $c = 3 \times 10^8$ m/s. They can also propagate through some forms of matter, but at a reduced speed. c is one of the most fundamental constants in physics: relativity theory postulates that no energy or matter propagates faster than the speed of light. Astronomy depends on the knowledge of the speed of light to estimate the size of the universe. Communication via electromagnetic waves is limited by the speed of light, *e.g.*, the speed of computers or the interaction with satellites in space.

The speed of light also connects the most fundamental physical quantities of space and time. These are defined rather than derived. Historically, space or distance is defined by comparison with geophysical quantities, for example the length of the Earth's equator. Time is derived from periodic events, initially also geophysical phenomena such as a day, month, year, etc. Later it was replaced by oscillating systems of increasing precision, first a pendulum in a mechanical clock, then a quartz oscillator in a digital clock, and now an atomic transition in cesium known to 15 digits accuracy. By subdividing the high oscillation frequency into fractions, long time intervals are measured with the same accuracy. Knowing time or frequency with such precision, the constant speed of light allows one to determine distance with the same precision. Increased precision of fundamental constants is an important effort in science since it can lead to new discoveries not detectable with poorer resolution.

Visible light is just a narrow spectrum of electromagnetic waves. In order to measure the propagation speed we will use a low power flashing red diode laser. The speed is calculated from $\Delta d/\Delta t$.

Experimental Setup

In this laboratory sound waves are produced by a planar bi-directional loudspeaker based upon the piezoelectric effect, shown in figure 27. Such flat speakers are used in cell phones, laptop computers and small radios. The sound wave is detected with a microphone that produces an electrical signal proportional to the sound wave. The microphone is shown in figure 27. The principle of the microphone is that of a parallel plate capacitor with one electrode being a flexible membrane; the circuitry produces an output signal with time-dependent potential that depends on the capacitance changes. The microphone is nearly omnidirectional.

Traveling Sound Waves

The setup for this part is shown in figure 28 and contains two elements: the loudspeaker which produces sound waves, and the microphone to detect them. The microphone and its amplifier have three connections: the first is a dc voltage of V_{dc}=12V, provided by a small power supply that is to be connected to the wall socket. There are two BNC connections, one supplying the AC signal measured by the microphone, and the other a DC signal proportional to the measured amplitude. The DC signal is the middle BNC. The microphone and its support are mounted on a movable track with a ruler attached so as to measure the waveform at different distances from the speaker. The speaker has a BNC connection, which is to be connected to the function generator to drive the

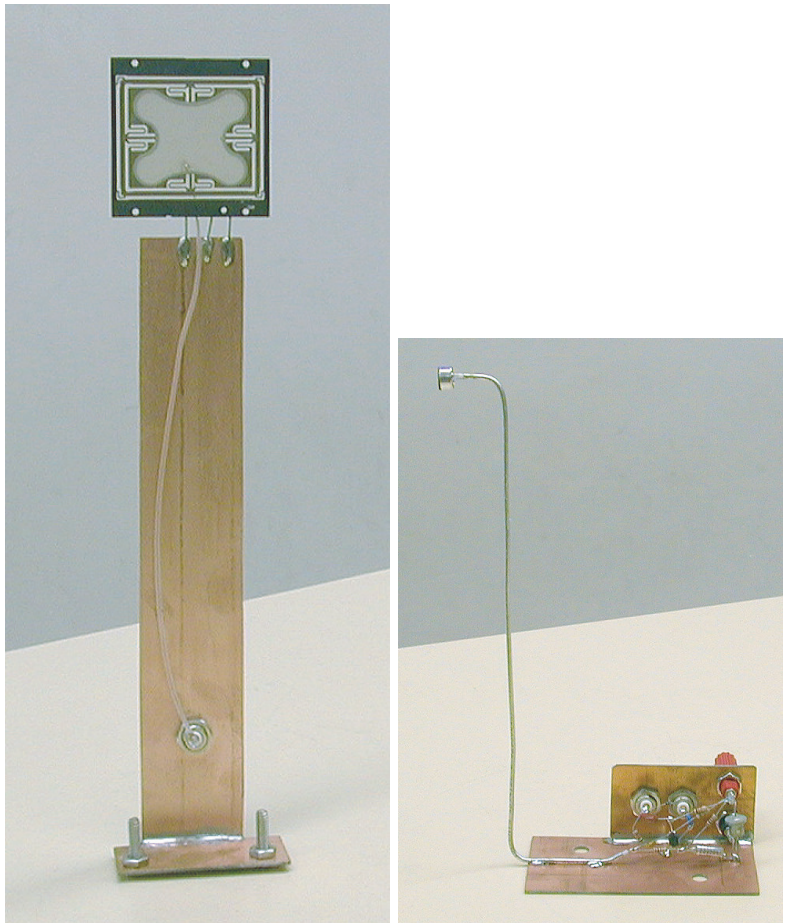

Figure 27: Speaker used to produce sound waves and microphone used to detect them.

speaker.

- Connect the speaker to the function generator and apply a sine wave in the frequency range 2 kHz-20 kHz. Use the BNC T-connector to split the signal from the function generator so you can send it to the speaker and also to the oscilloscope. Have CH1 of the oscilloscope display the function generator signal and CH2 display the signal received by the microphone. Set the scope to trigger on CH1. (Find the trigger source menu and set it to Channel 1. Then set the trigger level to create a stable display.) Use the AC BNC of the microphone for this part. Observe on the oscilloscope the waveform of the sound signal versus time at a fixed position z, $V_0(t) = \cos(\omega t - \phi)$, where V_0 is the amplitude, ω the angular frequency, and ϕ an arbitrary phase shift.

- Now, we will vary the position of the microphone and observe the phase shift of the signal detected by the microphone with respect to the signal driving the speaker. Move the microphone away from the speaker and observe that the phase shift with respect to the driving signal increases linearly with distance, $\delta\phi = k\delta z$; k=constant is the wavenumber. The distance over which the phase changes by 2π is the wavelength, so that $2\pi = k\lambda$.

- Measure the wavelength of the sound waves by measuring the distance the microphone moves when the phase changes by π and 2π, and record the distances in your notebook. Also

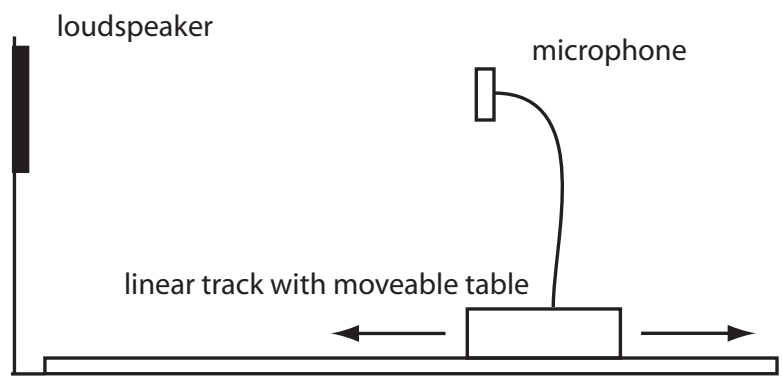

Figure 28: Schematic diagram of the laboratory setup for variation of the phase shift of the sound wave detected by the microphone.

record the frequency of the driving signal using the oscilloscope measurement. You can then determine the phase velocity of a sound wave in air, $v_p = f\lambda$. Be sure to determine the uncertainty in your distance and frequency measurements to perform error propagation.

- Repeat this measurement for about 5 different frequencies in the range 2-20 kHz so that you can plot the dispersion relation, f vs. k. This will show that the sound speed does not vary with frequency, $v_p = f\lambda$ is a constant.

Standing Sound Waves

In this part of the lab we will create standing waves, as opposed to the traveling waves in the last section. The superposition of oppositely propagating, equal amplitude waves forms a standing wave pattern,

$$V_0 \cos(k_x x - \omega t) + V_0 \cos(k_x x + \omega t) = 2V_0 \cos(k_x x) cos(\omega t).$$

In a standing wave the phase does not shift but the amplitude $2V_0 \cos(k_x x)$ varies sinusoidally with position. Amplitude nulls (nodes) occur at spacings

$$k_x x = n\frac{\pi}{\lambda},$$

n=integer. Thus, the node spacing is one half wavelength. The same holds for the spacings of the amplitude maxima. If the incident and reflected wave amplitudes have *different* amplitudes their superposition yields maxima $(V_1 + V_2)$ and minima $(V_1 - V_2)$, each spaced one half wavelength apart.

To create the wave traveling in the opposite direction, we will use a reflector as depicted in figure 29. The reflector is mounted on wheels and moving its position will cause the standing wave pattern to move as well. By measuring the nodes and antinodes in the microphone signal as a function of the reflector position, you can determine the wavelength of the sound signal.

- The position of the reflector can be measured electrically because one of its wheels is connected to a linear 10-turn potentiometer. When looking at the shield from the back, you will see four banana plug connections. The left two leads are the power supply inputs to the potentiometer, which you need to connect to the power supply at 2V. The right two are the output signal of

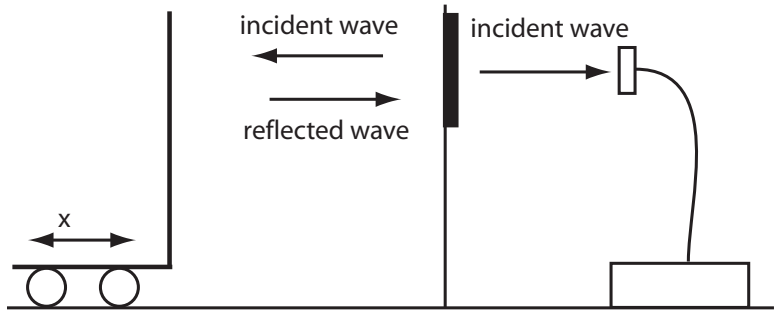

Figure 29: Schematic diagram of the setup for measuring the wavelength of standing waves.

the potentiometer, which acts as a voltage divider, outputting a fraction of the input voltage depending on the position of the wheel.

- Calibrating the shield position: The potentiometer voltage needs to be calibrated by measuring the actual distance the shield moves with the ruler. Thus, measure the voltage produced by the potentiometer output with the multimeter as you move the shield at fixed distance increments (5cm for example) with respect to the ruler. Plotting the voltage as a function of distance will give you the voltage-to-centimeter calibration conversion. This calibration will remain valid as long as you don't change the voltage input.

- Measure the standing waves: the position voltage and the DC signal from the microphone will be measured by the myDAQ simultaneously. Use the program "CH1 vs CH0"; feed the position voltage into CH0 and the DC signal from the microphone into CH1 (using the aluminum connector box to convert from the BNC connection to banana plug connection). Under "measurement type," select *continuous*. Set the sampling rate to 0.1s. Set the frequency of the sinusoidal function generator output to f=5 kHz and connect this signal to both the sound speaker and the oscilloscope (to measure the frequency) by using the BNC T-connector. Once you start the data acquisition, move the reflector slowly, keeping the microphone at a fixed position. By converting the position voltage into a distance using your calibration, you can measure the distance between either maxima or minima to determine the wavelength and thus the speed of sound. Try this measurement a couple of times and view the data in Excel by plotting CH0 on the x-axis and CH1 on the y-axis. You should see a sinusoidal signal with at least 4 or 5 oscillations. Note that this measurement does not require a display of the phase with an oscilloscope.

Speed of Light by Time of Flight

In this experiment you will send a pulse of laser light to a mirror a distance d away and measure the time Δt for the light to return and hit a light sensing diode. The speed of light is then $2d/\Delta t$. To measure the time in $10s$ of nanoseconds, you will use the oscilloscope. The oscilloscope can take a GigaSample per second (1 GS/s), or one analog to digital sample every nanosecond with high timebase accuracy. To establish the start time, you will reflect the pulse into the detector with a close mirror and note the time light first hits the detector. Then the near mirror is removed and the light pulse is reflected from the far mirror a distance d away. The longer time it takes the pulse to hit the sensor is noted on the oscilloscope and $\Delta t = t_{far} - t_{close}$ is measured. You will measure the

distance between the mirrors with a tape measure. Distance and time measurement errors should be recorded so the appropriate error analysis can be performed.

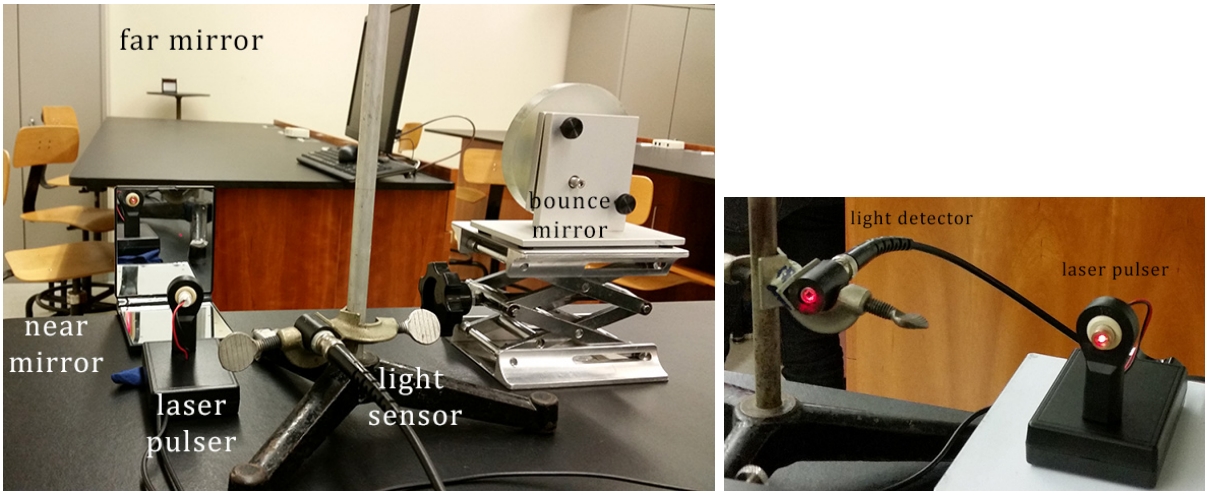

Figure 30: Laser light is reflected into a laser diode by a close and a far mirror.

Procedure and Measurements

Two cables come from the box holding the laser. One is the power for the laser which needs to be plugged in (and unplugged at the end of the lab). When powered, the laser should begin pulsing. The cable terminated with a BNC connector carries a trigger pulse every time the laser is fired which you will use to trigger the scope. Plug this cable into the scope channel 2.

The photodiode detector is connected to channel 1 of the oscilloscope with a BNC cable. The photodiode acts like a little solar cell, generating a voltage proportional to the intensity of the light that falls on the black sensitive area. Although the return pulses might look sharp on a ms timescale, the rise time is very apparent on a ns time scale. You need to detect the first sign of the returning pulse, the first sustained rise from the zero line.

You are provided a pulsing laser with a trigger pulse output, photodiode detector, and two x-y adjustable front surface mirrors. Don't touch the mirror surface with your fingers. Fingerprints will etch away the mirror surface. For best results use the second front surface mirror to bounce the light back to the far mirror, doubling the light travel distance to the sensor. The total light path should be about 20 m using two bounces on the far mirror.

- Set the scope time base to 10-100 ms. Turn on channel 2 so the square wave trigger pulses are displayed. (If the signal doesn't look like a square wave, check the Ch 2 menu and make sure the coupling is DC) Go to the trigger menu and set the trigger source to CH2 and rising slope. Adjust the trigger level so that the pulse is stable in the center of the screen. A little arrow on the right hand side of the screen indicates the trigger level. The vertical wiggles in the signal is random noise, which will contribute to your measurement uncertainty.
- Change the time base to 25 ns.
- Display the signal from the photodiode on scope CH 1. Bounce the laser light off the far mirror and the bounce mirror and see when the light first gets to the detector. Adjust the

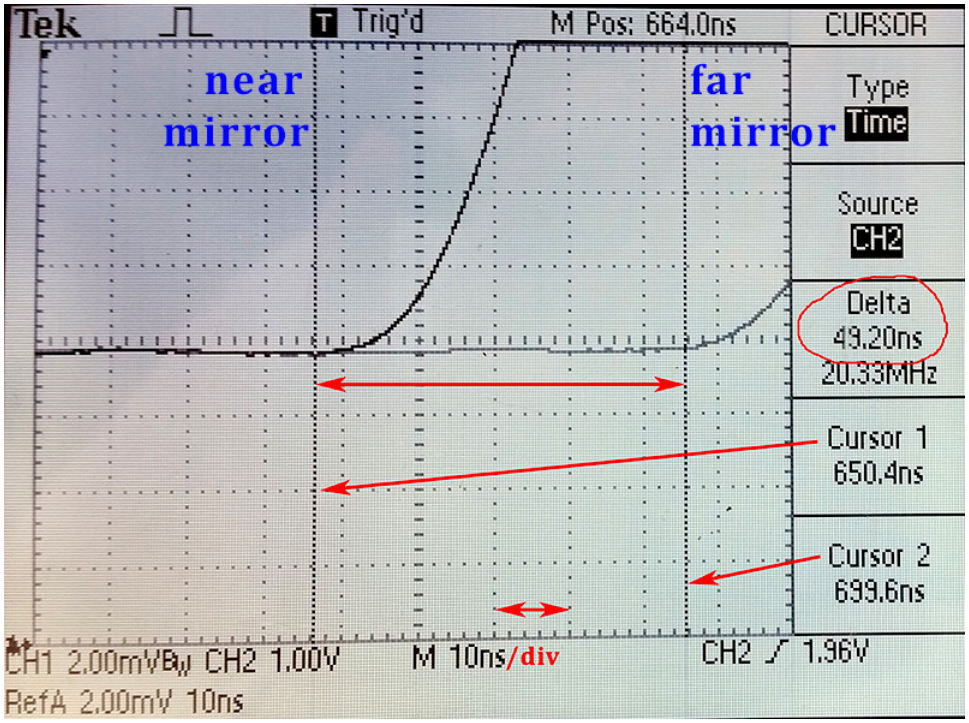

Figure 31: Typical Oscilloscope data

detector so the brightest part of the laser light falls on the small black square in the detector.

- Once the signal is present, we want to save it as Ref A in the scope's internal memory. Do this in the *Save/Recall* menu. Select save waveform and then save CH 1 to Reference A. The saved signal can be displayed on the scope by pressing the white "Ref" button to the bottom left of the CH1 controls and toggling the Display Ref A switch.

- Use the vertical (TIME) cursor 2 on the oscilloscope to mark the detection time from the far mirror. Insert the little foldable near mirror in front of the laser and reflect the light directly back into the sensor. Set cursor 1 to indicate the shorter detection time from the near mirror. The oscilloscope will automatically calculate Δt between the time cursors. Estimate the error in your time measurement.

- One way to cut down the noise and random errors, is to average the data. The scope has an acquire average mode where you can vary the number of traces included in the average. (The Aquire button is above the horizontal scale knob.) Try different numbers of averages and see how that effects the noise and measurement error of the near and far travel times.

- Change the time base to 10 ns. Repeat the measurements with near and far mirrors. You may have to slide the trigger to the left to have both near and far measurements on the screen at the same time.

- The scope has the ability to save a trace and then display it. Average the far mirror trace, save it and then display it on the screen. Switch to the near mirror, average and make a measurement of Δt with the cursors. A typical display is shown in figure 31.

- Measure the distance between the mirrors with the tape measure. Make sure you know where 0 is on the tape measure. Many students mistake the 10 cm mark for 0 cm. Make note of your distance measurement accuracy for error analysis.
- Make a calculation of the speed of light. If you're not pretty close, try to figure out why and correct it.

Analysis

You will only be asked to report on the sound wave experiment.

Traveling Sound Waves

The goal of this section is to measure the dispersion relation for sound waves traveling through air. This is done by measuring the frequency of oscillation for different wavevectors and plotting $\omega(k)$. For a non-dispersive medium, the frequency is simply linearly related to the wavevector:

$$\omega(k) = v_g k.$$

The slope of the relation is the phase velocity, i.e. the speed at which sound travels through air.Thus, by plotting $\omega(k)$ you can show that sound traveling through air is non-dispersive, and determine the phase velocity.

- You have measured the wavelength of traveling sound waves for 5 different frequencies. Convert frequency f to angular frequency ω by using $\omega = 2\pi f$ and wavelength λ to wavevector k using $k = 2\pi/\lambda$.
- Plot the dispersion relation with the wavevector on the x-axis and angular frequency on the y-axis. Perform a linear regression with wavevector as your x-values and angular frequency as your y-values, making sure you require the intercept to be zero. The regression output gives you the slope of this relation, which is the phase velocity, and gives you the uncertainty in this number. Does your calculated value for the speed of sound agree with the accepted value within your experimental uncertainty?

Standing Sound Waves

This section provides an additional way to measure the wavelength of sound waves by creating a standing wave pattern. By positioning the microphone at various positions throughout the standing wave pattern, you measured the position of subsequent nodes and antinodes. The position was recorded by measuring the voltage of a potentiometer which can be converted to a position using your voltage-meters conversion.

- First, determine your voltage-position conversion by plotting your calibration data. Put the voltage readings on the x-axis and the position measurements on the y-axis. The slope of this line gives you the conversion in units of distance/voltage.
- Next, open your data file for standing sound waves in Excel. CH0 of your data recorded the position voltage from the potentiometer and CH1 recorded the amplitude of the sound wave

detected by the microphone. Convert the position data into distance by using your voltage-position conversion. Then, plot the microphone signal vs position, by putting the distance values on the x-axis and the microphone signal on the y-axis.

- Your plot should display five or six maxima and minima of the oscillation pattern. The distance between adjacent maxima or minima is equal to *one half* of the wavelength. Calculate the average value for the wavelength from these 5 or 6 values, and also calculate the standard deviation of the mean (see laboratory assignment 1).
- From your measurement of wavelength, determine the phase velocity of the sound waves, and calculate the uncertainty of that value using error propagation. Is the accepted value for the speed of sound within your experimental uncertainty? Which method of measuring the speed of sound was more accurate, and which had better resolution?

Lab Assignment

For this lab assignment, the lab report and questions will together be worth 100 points. The report will be out of 75 points and the question will be worth 25 points.

Lab Notebook

Keeping a thorough record of what was observed in the laboratory is essential. Often you will need to refer back to your notes to confirm measured values and procedures to look for errors. Answer the following questions in your lab notebook, and turn them into your TA before leaving the lab

1. Present your measured speed of light with errors. For the sake of time, assume your whole Δt has an uncertainty of 1 ns and your whole Δx has an uncertainty of 2 cm. If the true speed of light (2.99792×10^8 m/s) is not within your uncertainties, explain to your TA where you think the error is coming from.
2. Give an example of both a dispersive and non-dispersive dispersion relation for the group velocity of a wave packet $v_g = \frac{\partial \omega(\mathbf{k})}{\partial \mathbf{k}}$

Lab Report

For the lab report, you will be asked to present your data before and after manipulation and explain important results. This will be a full lab report, but only on the speed of sound portion of the lab session. All sections should be written assuming only this portion of the lab was performed, ignoring the other experiments performed during the lab session.

1. **Cover Page**
   - Descriptive title
   - Date the lab was performed
   - Your name, and your lab partners' names
   - Your TA's name and lab section

2. **Introduction**

   The introduction section explains, in your own words, the purpose of your experiment and how you will demonstrate this purpose. Try and be as brief as possible, yet still get your point across.

3. **Experimental Results**

   This section should briefly explain what was measured and how the data was collected (diagrams of the experimental set up may be helpful), present the raw data in graphical form (if possible) including uncertainty values with all numbers. Your graph should include labels on both axes that include units. Label your graphs as figure 1, figure 2, etc, so that you can refer to them in your text. In the text, explain the meaning of the variables on both axes and include an explanation that makes it clear to the reader how to interpret the information displayed on in the plots.

   Along with a description of the experimental setup, your report should contain:

   - Plot of the dispersion relation for traveling sound waves obtained by measuring phase shifts.
   - Table containing the values measured for the wavelength of sound from the standing wave section.

4. **Analysis**

   This section should present any calculations performed on the raw data, including uncertainties using propagation of errors. Example: if you are testing Ohm's Law $V = IR$, and you measured V and R, then here you calculate I. If you have a theoretical value for your calculated quantity (I in this example), state whether it is within your uncertainty range. Also, answer any questions proposed in the lab manual.

   you should have:

   - Results of the linear regression, determining the phase velocity of sound and its uncertainty.
   - Determine the average wavelength and its uncertainty, from the standing sound waves. Calculate the speed of sound and the uncertainty in this calculated quantity.

5. **Conclusion**

   State how your results demonstrate (or fail to demonstrate) the objectives you presented in the introduction section. If you have identified a significant source of error, present an alternative way to perform the experiment that circumvents the problem.

Questions

1. You will investigate the dominant sources of error in measuring the speed of light in the lab. Throughout this question, assume that the error in each time cursor on the scope is $\sigma_t = 1$ ns and the error on each length measurement is $\sigma_{x_i} = 1$ cm for the ith straight portion of the beam path. Suppose that in the lab, you measured $\Delta t = 72$ ns and Δx =21.6 m. Given this, and the fact that the speed of light is calculated as $c = \Delta x/\Delta t$, answer the following questions.

a) Write an expression for the speed of light in terms of the time cursor measurements and lengths of each straight beam path. Draw a diagram of the beam paths with clear labels on each path.

b) What is the error on your measured speed of light, σ_c?

c) Now assume that we have the means to measure the beam path lengths with infinite precision (zero uncertainty). What is the error on the measured speed of light now?

d) Now assume that the scope's time cursors are infinitely precise (and beam path error is now non-zero). What is the error on the measured speed of light now?

e) Using your results from the previous two parts, which uncertainty is the main contributor to the total error on the speed of light measurement?

Laboratory 6: Geometric Optics

Background Information

In the following experiments, you will investigate some of the geometric and physical properties of light rays. In particular, you will verify Snell's Law of refraction, and work with thick and thin lenses used to redirect and focus light rays. Parallel rays of white light are produced by a "ray box", and a collimated monochromatic beam is produced by a laser. Observations can be recorded using a digital camera. You will have one laboratory session to complete the measurements, and your report explaining your results will be due the following week.

Warning: You will use a diode laser in some of these experiments. Although it is only a low-power laser, **NEVER LOOK DIRECTLY INTO A LASER BEAM!** Permanent eye damage (burned spot on retina) may occur from exposure to the direct or reflected laser beam. The beam can be viewed without any concern when it is scattered from a diffused surface such as a piece of paper. The laser beam is completely harmless to any piece of clothing or to any part of the body except to the eye.

Keep your head at all times well above beam height to avoid accidental exposure to your own or your fellow students' laser beams. Do not insert any reflective surface into the laser beam except as directed in the instructions or authorized by your teaching assistant. Only have the laser on when performing an experiment, and be aware of the direction of the laser so as not to harm individuals at neighboring lab stations. The laser contains a high voltage power supply. Caution must be used if an opening is found in the case to avoid contacting the high voltage. Report any problems to your TA.

Snell's Law: Refraction and Total Internal Reflection

The index of refraction n in any material is defined by the speed of light in the material c',

$$c' = \frac{c}{n},$$

where c is the speed of light in vacuum. To a very good approximation n=1 in gases such as air, whereas in transparent solids, n is typically larger but still of order unity. For plastic or glass, n varies over the range 1.3-1.8.

Figure 32 shows a ray incident upon an interface between two different transparent materials. The materials have indices of refraction n_1 and n_2, respectively. If the incident ray first passes through a material with index of refraction n_i at an angle θ_i from normal incidence, then the *reflected* ray makes angle θ_r, with $\theta_i = \theta_r$. **Snell's Law** gives the angle made by the *transmitted* light θ_t, which travels into a material with index of refraction n_t:

$$n_i \sin\theta_i = n_t \sin\theta_t.$$

In this laboratory exercise, you will verify these relations between incident, reflected, and transmitted angles. Additionally, you can determine the index of refraction for the material your prism is made out of by applying Snell's Law.

An interesting consequence occurs when $n_i > n_t$. At some incident angle $\theta_1 = \theta_c < 90^{\cdot}$, the transmitted angle $\theta_2 = 90^{\cdot}$. When $\theta_i > \theta_c$ there is no transmitted light ray, and all of the light ray

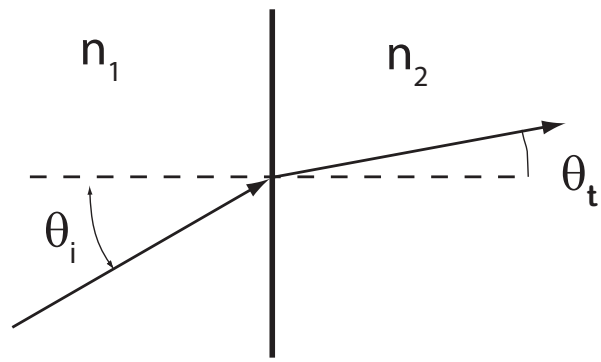

Figure 32: Behavior of a light ray at the boundary between two transparent materials. Light ray arriving from upper left in material type 1 gets reflected to upper right, and refracted into material type 2 at lower right according to Snell's Law.

is reflected. θ_c is called the critical angle, found from

$$\sin\theta_c = \frac{n_t}{n_i}.$$

Total internal reflection is the principle behind the transmission of light in fiber optic networks.

Lenses

In this section, you will study the properties of lenses. Your previous theoretical treatment of lens behavior assumed the limit of thin lenses, however in the first part you will be using thick clear plastic lenses to easily observe the path of the light rays.

You will first measure the defining property of a lens: its focal length, which is a measure of how strongly the optical device converges or diverges light. Secondly, we will see how these thick lenses deviate from the thin lens approximation by observing spherical aberration. Finally, you will use a combination of lenses to produce magnification and demagnification and calculate the magnification factor. We start with a series of parallel rays that enter a set of lenses. You will look at the separation between rays and use this to calculate the magnification factor. The magnification factor is defined as

$$M = \frac{\text{final separation}}{\text{initial separation}}$$

After being studying these properties using thick lenses, you will then switch to using *thin* lenses, which should agree well with the theoretical predictions from your lecture class. The focusing properties of a thin lens are expressed by a single quantity, the focal length f or its inverse, the diopters, $D = 1/f$, measured in units of m^{-1}. When two thin lenses are placed next to each other in a sequence they form a combined lens with focal length

$$\frac{1}{f_{total}} = \frac{1}{f_1} + \frac{1}{f_2}$$

or equivalently

$$D_{total} = D_1 + D_2.$$

When the two lenses have a finite separation $D = e$ the expression changes to

$$\frac{1}{f_{total}} = \frac{1}{f_1} + \frac{1}{f_2} - \frac{e}{f_1 f_2}.$$

You will verify this expression by measuring the focal length of two thin lenses individually, and then their combination.

Lenses are used to create an image of an object which is either magnified or demagnified. Consider an illuminated object at an axial distance o from a thin lens. A light ray from the top of the object passing through the center of the lens will not be deflected forming a straight line through the lens. A light ray from the top of the object and parallel to the axis will be deflected and pass through the focal point on the opposite side of the lens. An image is created where the two beams intersect. The distance i from the lens to the image plane, the focal length f, and the object length o are related by a simple expression,

$$\frac{1}{f} = \frac{1}{o} + \frac{1}{i}$$

(you can derive this result!). You will verify this expression by illuminating an object at a specific distance from a thin lens, and then measuring the distance from the lens to where the image is formed.

Procedure and Measurements

Snell's Law and Total Internal Reflection

A ray box will be used in this part to produce one or more rays of white light. These can be made to emerge from the box parallel to, or convergent/divergent from one another. The rays are incident on various optical elements (lenses and a prism) in order to observe how they are redirected on entering, passing through, and exiting optical objects.

After you provide power to the ray box, place an unlined piece of white paper under the ray box so you can more easily observe the rays. Arrange the filter so that 5 rays appear. By sliding the outer hull of the ray box back and forth, one can produce diverging, converging and parallel rays. Take a minute to make the rays as parallel as possible. *Be careful not to move it for the remainder of the experiment.* Periodically check to be safe. Note that the ray box gets hot very fast, so please take care in handling it!

- **Snell's Law:** Arrange the baffle (see figure 33) on the ray box so a single ray appears. On top of a white piece of paper, place the trapezoid prism so that the ray passes through undeflected. Then rotate the prism roughly (precision is not important!) 45° as in figure 34. Notice that there are actually two interfaces where the laws of ray optics apply: the front interface and the back interface. The light ray from the ray box is incident on the front surface, is reflected off of the front surface, and is also transmitted through the front surface inside the prism. You will be measuring the angles of these three rays to verify the laws of ray optics. These laws could also be verified for the back interface, by realizing the ray inside the prism, which is the *transmitted* ray according to the front interface, is now the *incident* ray with respect to the back surface.

  You will be measuring the angles by tracing the outline the prism, and tracing the location of the light rays, and then using a protractor to measure the angles.

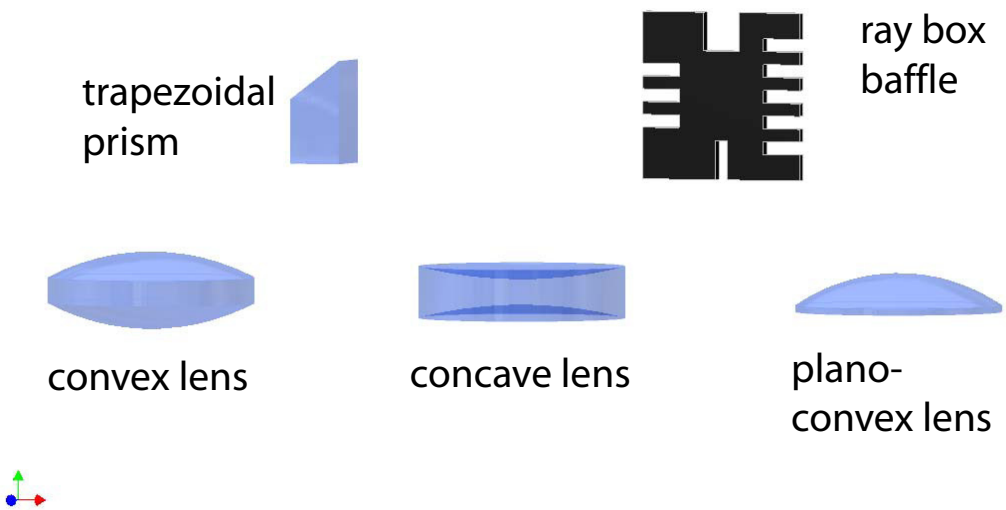

Figure 33: Components used with the ray box: lenses, prism, and baffle.

Trace the outline of the trapezoid once you are happy with its orientation, and be careful not to move anything while performing this section.

Trace out the location of all the light rays: the ray incident on the front surface, the ray reflected off of the front surface, and the ray transmitted through the second surface. Be sure to mark the position the rays enter and exit the prism so you can re-create the ray that travels through the prism.

To analyze, draw in the lines *normal* to each face of the prism where the ray entered/exited. Using a protractor, measure the incident and reflected angles for the front interface. Now measure the angle of the ray transmitted through the front interface (inside the prism). Use your measured angles, and the fact that $n_{air} = 1$ to calculate the index of refraction of the plastic by plugging into Snell's Law.

Next, use Snell's Law and the n you just determined to *predict* the angle at which the ray exits the *back* interface. Does this angle agree with the angle you measured?

- **Total Internal Reflection (TIR):** Your goal here is to observe total internal reflection. TIR will only occur on the back interface, since at this interface n_i is that for the prism, and $n_t = n_{air}$ satisfying the criterion $n_i > n_t$.

  Still using a single ray, arrange the trapezoid as follows: Allow the ray to pass through the slanted surface of the prism (the diagonally cut surface which, if excluded, would make the prism a rectangle). Slowly rotate the prism until the ray transmitted through the *back* interface disappears totally. This is total internal reflection. Trace the prism, the ray incident on the front interface, and mark the spot on the back interface where there is total internal reflection so you can draw the inner ray later. **Note:** Make sure you are measuring your angles at the precise orientation when the outgoing just disappears. It is easy to mistake a random orientation that has TIR; here we are looking only for the **critical angle**.

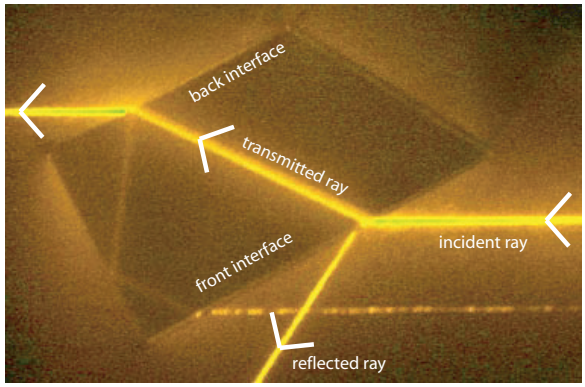

Figure 34: the trapezoidal prism is rotated approximately 45 degrees with respect to the incoming (from the left) light ray. The light ray reflects off of, and is transmitted through the front interface. Additionally, the light ray is incident on, and transmits through the back surface. By measuring the angles of incidence and transmission, Snell's Law can be verified.

As before, draw in the lines normal to the faces and measure the incident angle for the front interface, the transmitted angle for the front interface, and the incident angle on the back interface. The angle of incidence on the back interface is the critical angle for TIR. Using trigonometry and your value for the index of refraction determined above, find the critical angle and compare it to the value predicted by Snell's law.

Thick Lenses

- **Focal Length:** Arrange the filter so that 3 rays pass out of the ray box. Place the bi-convex lens (looks like a football) in front of the rays, with the axis of the lens normal to the rays. Observe that the 3 rays all converge to a single point on the far side of the lens. Now move the lens closer and farther away from the ray box, keep its axis normal to the rays, does the focal length change? With a new sheet of white paper, trace the lens and place a few dots along the rays to trace their path and measure the focal point. Be careful not to move anything while marking the paper. Repeat the same procedure for the biconcave and plano-convex lens. You will have to trace diverging rays backwards to the reverse side of the lens to find the focal point and thus its focal length.

- **Spherical Abberation:** Place the bi-convex lens back in front of the ray box and now allow 5 rays to fall on it, again making sure the lens axis is normal to the rays. Is there one focal point now or are there two? What do you think is happening? Try blocking out the middle three rays to see which rays converge to which focal point. This is called spherical aberration. Measure the distance between these two focal points and the distance from the lens to the midpoint between the two focal points. Then calculate the % difference between the two focal point positions, relative to the focal point of the central rays. Chromatic aberration is another lens problem which arises from the fact that the refractive index depends on color.

- **One Dimensional Magnification:** Allow 3 rays to pass out of the ray box, making sure the rays are parallel again, and place the biconcave lens near to the ray box. You should observe the diverging rays. If you now place the plano-convex lens just right, you can bring the diverging rays parallel once again. But now the rays should be farther apart! The original

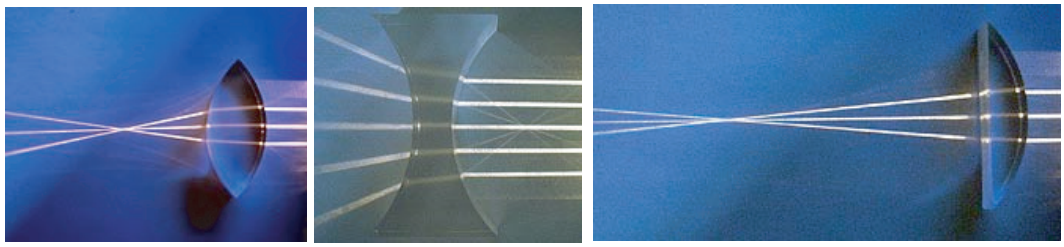

Figure 35: Convergence and divergence of light rays from three different lenses: Convex, Concave and plano-convex respectively.

spatial separation has been magnified. Trace the rays and measure the initial and final separation distances for the incoming and outgoing rays. Create the largest magnification you can. Repeat the above steps with the lenses placed in reverse order to produce demagnification. Then find the magnifications for the enlarging as well as reducing lens combinations.

Thin-lens Properties

The previous experiments dealt with thick, two-dimensional lenses that are rarely used. Now we will perform basic optics experiments with *thin* lenses used in most optical devices (cameras, microscopes, telescopes, glasses, etc). We will study the basic laws of lens combinations and image formation.

- First measure the focal length of individual lenses. For this purpose we generate two parallel (collimated) laser light beams. How is this done? We shine the single diode laser beam at an angle θ against a transparent plate, called a beam splitter. There will be two reflected beams, one from the front surface, the second from the back surface. The beams will be separated by a distance $d = D[sin(2\theta)](n_2 - sin^2\theta)^{-1/2}$, where n is the refractive index and D the plate thickness. Place the plate so that $\theta \approx 45°$ on the optical bench, and shine the laser rotated by 90° to the bench against it to generate two parallel laser beams with separation $d \approx$1cm along the axis of the magnetic bench (see the figure). Take a few minutes to get the laser beams to travel parallel down the linear track.

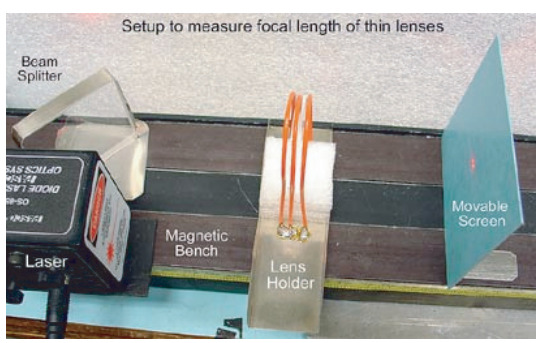

Figure 36: the setup for measuring the focal length for thin lenses. Parallel rays are produced by a beam splitter, and are then sent through an optical lens. The focal length can be found by observing the convergence of the two beams on a moveable screen.

- Shine the two parallel light beams through the middle portion of a thin lens held by the orange stand on the bench at an arbitrary distance from the laser. When you handle lenses always touch them at the edges but not in the middle, otherwise they will become dirty. If so, clean them with liquid soap and warm water and soft cloth or paper. Place the blue screen behind the lens and observe that with increasing distance from the lens the two light spots first converge to a single spot (the focus) and then diverge again. **Note:** When doing this measurement, take note of where the two laser beams start to overlap and where they stop overlapping. This will not be at the same point! Use these locations to approximate your error for this measurement. Using the metal ruler, measure the distance from the center of the lens to the focus and calculate $D = 1/f$. Use a different lens and repeat the measurement. Place the two lenses together and measure D_{total}. Check whether your result agrees with the prediction.

- Also measure the focal length of the 2cm diam lens supported by a vertical twisted wire which will be used in the next experiment on image formation.

- Furthermore measure the focal length of a "thick" lens, an acrylic sphere. For such a ball lens the focal distance from the *center* is given by $f = nD/[4(n-1)]$ where n is the refractive index (n=1.5) and D=25.4 mm is the diameter of the sphere. Measure the focal length from the surface, $f' = f - D/2$, and compare your measurement to the theory. Ball lenses are used to couple fiber optics cables.

Image Formation with Lenses

Consider an illuminated object at an axial distance o from a thin lens. A light ray from the top of the object passing through the center of the lens will not be deflected forming a straight line through the lens. A light ray from the top of the object and parallel to the axis will be deflected and pass through the focal point on the opposite side of the lens. An image is created where the two beams intersect. The distance i from the lens to the image plane, the focal length f, and the object length o are related by a simple expression,

$$\frac{1}{f} = \frac{1}{o} + \frac{1}{i}$$

(you can derive this result!). Verify this result experimentally as follows:

- Place a light-emitting diode at the left end of the optical bench. It operates on 5V, 12mA dc (red=plus, black=minus). On a vertical stand next to it place the metal strip with a transparent millimeter slide in its iris. The illuminated slide will be our object. To form an image use the lens held by a vertical twisted wire whose focal length is known from an earlier measurement. In order to form a real image the object distance has to satisfy $o > f$.

- Place a movable screen (blue cardboard) on the image side of the lens and observe that at a certain distance i a sharp image of the mm grating will be formed. It is advisable to calculate roughly where you expect the image to be formed so that you know where to place the screen. Measure i, o and f to verify the above expression. Repeat for several values of o so as to show that the expression holds in general.

  The size of the image I and object O are simply related by

$$\frac{I}{O} = \frac{i}{o} = \frac{f}{o-f}.$$

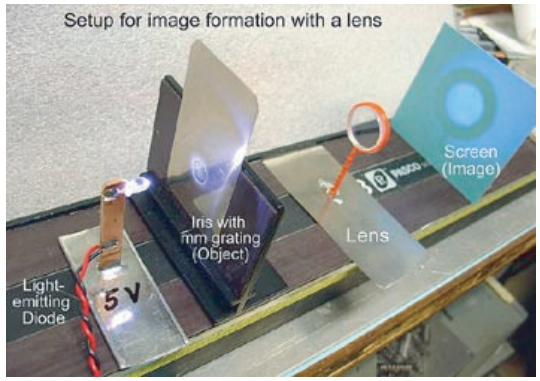

Figure 37: The setup for the image formation experiment. An image of an object is formed by focusing the light through an optical lens. For the object, you will use a 1mm grating, and the image will be the projection of the grating on a moveable screen. In the figure, the screen (image) is relatively close to the lens, however this may not necessarily be the case.

Magnification occurs if $i > o$ or $f < o < 2f$. For our setup, O is the spacing of the grating = 1mm and I is the spacing of the image of the grating formed on the screen. For $o = 2f$ one has $I = O$ but note from the dot on the slide that the image is inverted compared to the object. For $o > 2f$ the image is reduced. Verify this property by measuring at different values of o the image size with a ruler, knowing that the object size is a grating of 1mm/div. It may be easier to measure the width of several grid squares and divide to get an average measurement.

Analysis

In the previous experiments, you used statistical analysis to determine the best guess and uncertainty of repeatedly measured quantities, and also the fit parameters of multiple pairs of two measured quantities that exhibited some functional relationship. In the present laboratory assignment, you measured angles and distances with the aid of protractors and rulers. In this situation, our experimental uncertainty cannot be determined statistically, and is due the accuracy of the measurement device. For example, if you measure and object with a ruler that has 1mm spacings, you may visually see that the object lies closest the 20mm tick mark. Since the ruler only has accuracy up to 1mm, this means that the measured distance is most likely somewhere between 19.5mm and 20.5mm. Thus, when reporting this measured distance in your lab reports, it is reported as 20mm ±0.5mm. This 0.5mm uncertainty can then be used in error propagation to determine the uncertainty in quantities which are calculated from this measured distance (see Taylor section 1.5 for further details on estimating uncertainties). **Note:** When doing error propagation make sure angles are written in radians! Degrees will not work in this case.

Lab Assignment

For this lab assignment, the lab report and questions will together be worth 100 points. The report will be out of 75 points and the question will be worth 25 points.

Lab Notebook

Keeping a thorough record of what was observed in the laboratory is essential. Often you will need to refer back to your notes to confirm measured values and procedures to look for errors. Answer the following questions in your lab notebook, and turn them into your TA before leaving the lab

1. What is the difference between the critical angle and any general angle at which total internal reflection occurs?

2. With your measured angles from the Snell's law experiment, calculate the index of refraction of the prism. Does your measured critical angle corroborate your value for n_{prism}? Verify by calculating what the critical angle should be given your measured index of refraction.

3. Look at the equation for addition of thin lens focal lengths with finite separation. There exists a distance of separation e such that $f_{total} \to \infty$. What is this separation distance in terms of f_1 and f_2? Thinking about the focal length as the point at which two parallel beams passing through the lens will converge, what happens to the two parallel beams when $f_{total} \to \infty$? Draw a ray diagram of this situation.

Lab Report

For the lab report you will be asked to present data before and after manipulation and explain important results. This will be a full lab report, excluding the experiments on Snell's law and total internal reflection. *Your lab report should contain the following sections*

1. **Cover Page**

   - Descriptive title
   - Date the lab was performed
   - Your name, and your lab partners' names
   - Your TA's name and lab section

2. **Introduction**

   The introduction section explains, in your own words, the purpose of your experiment and how you will demonstrate this purpose. Try and be as brief as possible, yet still get your point across.

3. **Experimental Results**

   This section should briefly explain what was measured and how the data was collected (diagrams of the experimental set up may be helpful), present the raw data in graphical form (if possible) including uncertainty values with all numbers. Your graph should include labels on both axes that include units. Label your graphs as figure 1, figure 2, etc, so that you can refer to them in your text. In the text, explain the meaning of the variables on both axes and include an explanation that makes it clear to the reader how to interpret the information displayed on in the plots.

   Your report should contain:

   - Measured focal lengths of thick lenses, and discussion of spherical abberation and magnification.

- Describe the experimental setup and report the measured focal lengths from thin lenses section
- Report the measured distances (i and o) and spacing size (I) of image/object formation section.

4. **Analysis**

   This section should present any calculations performed on the raw data, including uncertainties using propagation of errors. Example: if you are testing Ohm's Law $V = IR$, and you measured V and R, then here you calculate I. If you have a theoretical value for your calculated quantity (I in this example), state whether it is within your uncertainty range. Also, answer any questions proposed in the lab manual.

   you should have:

   - Calculate the (de)magnification factor for your thick lens combination.
   - Verify that the position of an image formed by an object illuminated on a thin film is given by:
   $$\frac{1}{f} = \frac{1}{o} + \frac{1}{i},$$
   and that the image size (grating spacing) is magnified or demagnified and whether it the image is inverted based on these relative positions.

5. **Conclusion**

   State how your results demonstrate (or fail to demonstrate) the objectives you presented in the introduction section.

Questions

1. You will do some basic investigation into fiber optic cables. Imagine the situation shown in the image below. Monochromatic light of wavelength $\lambda = 700$ nm is incident from air on the opening of a fiber optic cable at an angle θ. It is refracted into the fiber at an angle α. The fiber of refractive index $n_f = 1.5$ is surrounded in a shroud of refractive index $n_s = 1.4$.

   Please answer the following questions:

   a) What is the critical angle for the fiber-shroud interface?

   b) For what range of refracted angles α will the light experience total internal reflection at the fiber-shroud interface? Be careful of doing algebra with a "$\geq$" sign in there. Make sure your answer makes sense physically. Look at the diagram and imagine α changing within the range you found. Does your answer make sense and meet the criteria for TIR?

   c) For what range of incident angles θ will the light experience TIR at the fiber-shroud interface? The maximum value of θ in this range for the angle of incidence on the fiber is called the cut-off angle

   d) If the light undergoes TIR on the first bounce (at the point labeled in the diagram with angle β), what does this imply about successive bounces off the fiber-shroud interface further down the fiber optic cable?

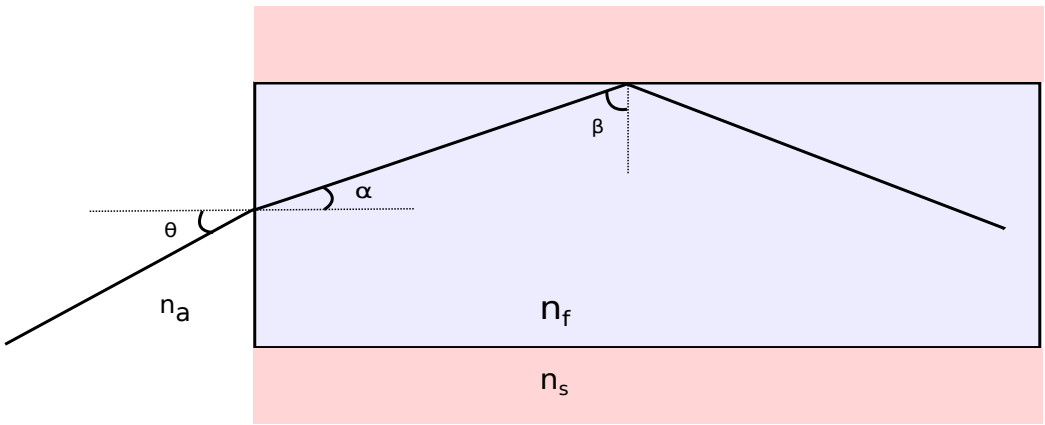

Figure 38: Monochromatic light incident at an angle θ, refracted into the fiber at an angle α, and incident on the fiber boundary at an angle β. Approximate the refractive index of air as $n_a = 1$.

Laboratory 7: Diffraction and Interference

Background information

In the present assignment, you will be performing experiments that demonstrate the wave-like nature of light. You will be taking advantage of some of the amazing characteristics of a laser, such as the coherence and the small beam divergence, in order to investigate single, double, and multiple slit diffraction and interference. You will have one week to perform the experiment, and you will report the results in a full lab report whose requirements are outlined at the end of this section.

Single Slit Interference

In this laboratory exercise, you will investigate the interference patterns caused by a single slit, double slit, and multiple slit systems. First consider the single slit shown in Fig. 39. A coherent light source, such as a laser, shines onto a small slit with width b. We wish to describe the intensity of the light that is projected onto various positions of a distant screen. The various positions on the screen are described by the angle θ or the distance x as shown in the figure.

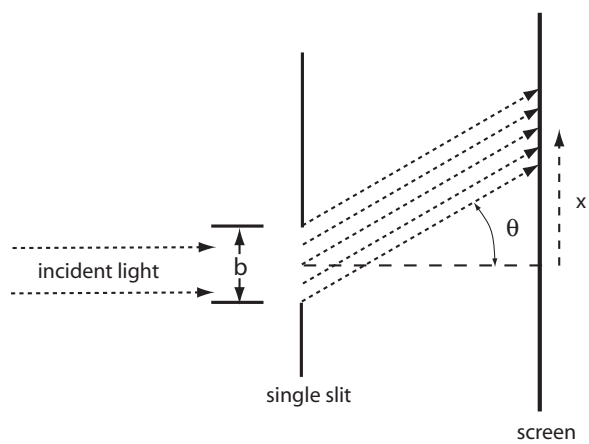

Figure 39: Single slit geometry: coherent light of wavelength λ is incident on the single slit from the left. The light passes through the slit of width b onto a screen. Constructive and destructive interference causes the intensity of the light to vary at different positions on the screen described by angle θ or position x.

The intensity at a specific point is determined by considering the light passing through the slit as made up of distinct rays of coherent light. Since the slit has a finite width, each ray will travel a different distance to reach this point on the screen. Since the light is coherent, there will be either constructive or destructive interference depending on the difference in path length, with respect to the wavelength of the light. This analysis yields an analytic expression for the intensity, given by

$$I(\theta) = I_0 sinc(b \sin\theta/\lambda),$$

with $sinc(x) = \frac{\sin(\pi x)}{\pi x}$. This is plotted in figure 40. The graph shows that the intensity will have a central maximum peak at $\theta = 0$ or $x = 0$ and subsequent maxima and minima. The position of minima are given by:

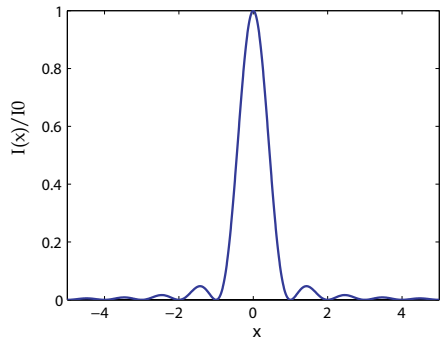

Figure 40: Normalized intensity of a single slit diffraction pattern is plotted as a function of position on the screen.

$$b \sin\theta = m\lambda \tag{25}$$

where $m = 1, 2, 3...$ We can convert this into distance x by using the approximation $\sin\theta \approx \tan\theta = x/D$, where D is the distance between the slit and the screen. Equation 25 becomes

$$b\frac{x}{D} = m\lambda \tag{26}$$

Thus, by measuring the distance between minima, you can determine the width single-slit.

Double Slit Interference

For the double-slit case, we first analyze for the idealized situation. Figure 41 shows a coherent light source illuminating a double slit diffraction grating. The slits have a width b and separation d. We assume that a single light ray passes through the slit and illuminates a position on a distant screen. As before, we wish to know the intensity of the light at various positions on the screen. This is given by the expression

$$I(\theta) = I_0 \cos^2\left[\frac{2\pi}{\lambda} d\cos\theta\right].$$

Since the light from the two slits will have to travel different distances, they will either constructively or destructively interfere. The angular positions of the maxima are given by:

$$d \sin\theta = m\lambda \tag{27}$$

The angular positions of the minima are given by

$$d \sin = (m + 1/2)\lambda \tag{28}$$

where $m = 0, 1, 2, 3...$ As in the single slit case, we can approximate $\sin\theta \approx \tan\theta$ to get the spacings of maxima and minima in terms of x.

In this analysis, we have neglected the fact that the slits themselves have a finite width, and thus will exhibit single slit diffraction. Therefore, in a real experiment like the one you are performing, the intensity on the screen will be a combination of both single slit and double slit diffraction. If

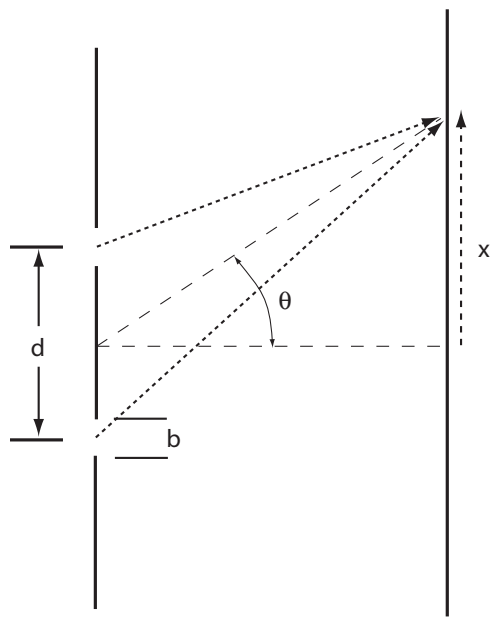

Figure 41: Coherent light source illuminates a screen after passing through a double slit diffraction grating. The slits have a width b and are separated by a distance d. We wish to know the intensity of at a position x on the screen.

the slit width b is explicitly accounted for, then the intensity $I(\theta)$ is a convolution of the results obtained individually for the single- and double-slit cases. That is,

$$I(\theta) \sim \cos^2\left[\frac{2\pi}{\lambda} d\cos\theta\right]\left[\frac{sin(\pi b\sin\theta/\ell)}{\pi b\theta/\ell}\right]^2, \tag{29}$$

with d the separation between slits, and b the width of each. The normalized intensity are shown in Fig. 42. The narrow maxima peaks are due to the double slit interference, and the overall envelope pattern is due to single slit diffraction. Thus, by measuring a diffraction pattern of a double slit grating, you can determine the slit width and slit separation.

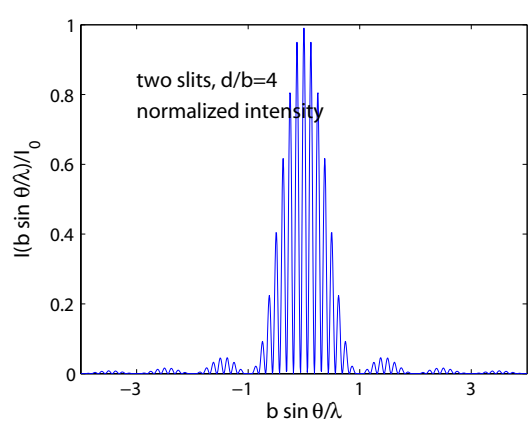

Figure 42: Intensity plot considering both single slit and double slit diffraction. The narrow maxima peaks and

Experimental Setup

At your lab station you will find an magnetic bench. At one end of the bench there will be a laser while at the other end there will be a linear translator. The linear translator consists of a potentiometer and a crank, which when a voltage is applied, can be used as a transducer from voltage to distance. Fitted into a small hole in the translator is a photodiode, a small semiconductor device that converts light intensity into current. It is the same as the photodiode used to measure the speed of light, but with a smaller active surface in order to detect fine interference patterns. A white plastic plate is mounted around the photodiode with a black strip to aide with laser alignment. Take note of the small black portion of the photodiode, about 1.1 mm on a side: this is the active detection area. The photodiode voltage is output at the top of the translation box via two banana plug wires.

Measuring with the MyDAQ

A diode laser illuminates a slit, which generates a diffraction pattern. Laser, slit and light detector are mounted on a magnetic bench and held in place by permanent magnets. The light intensity is measured with a photodiode. The carriage is moved transverse to the laser beam by rotating a threaded rod. The rod is connected to a linear potentiometer, which produces a voltage proportional to the position. Apply +5 V from a DC power supply via the red/black leads to the potentiometer. Obtain the variable voltage via the white leads, which will be measured on CH0 of the MyDAQ. The conversion of voltage vs. position can be obtained from a millimeter scale mounted inside the carriage housing.

The light intensity is obtained from the analog output of the photodiode. The output voltage is positive, and possibly has a small but noticeable DC offset. The output of the photodiode from the top of the translation box should be applied to CH1 of the MyDAQ.

In summary, the RED/BLACK leads of the potentiometer should be connected to 5V on the power supply; the white leads of the potentiometer should be connected to CH0 of the MyDAQ; and the voltage from the photodiode should be connected to CH1 of the MyDAQ.

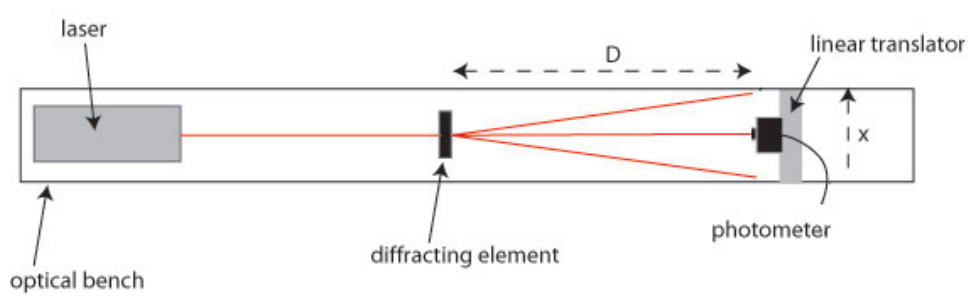

Figure 43: Schematic picture of the experimental setup and components. The photometer is a tiny photodiode whose signal is digitized by the myDAQ.

Procedure and Measurements

Detector response

As a first exercise, you will measure the profile of the laser without any diffracting elements. After this practice run is completed, it should be easy to repeat the measurement with various diffraction gratings in place.

- **Aligning the laser:**

  Position the photodiode in the mid-range x=2.5cm. This is the center of the translation box, and we will try to align our interference patterns such that their centers occur at x =2.5cm. Next, adjust the vertical and horizontal position of the laser beam so as to shine directly into the photodiode's active detecting region. You may wish to observe the photodiode's output voltage with the MyDAQ when aligning the laser. Try to align the laser to maximize the output voltage of the photodiode.

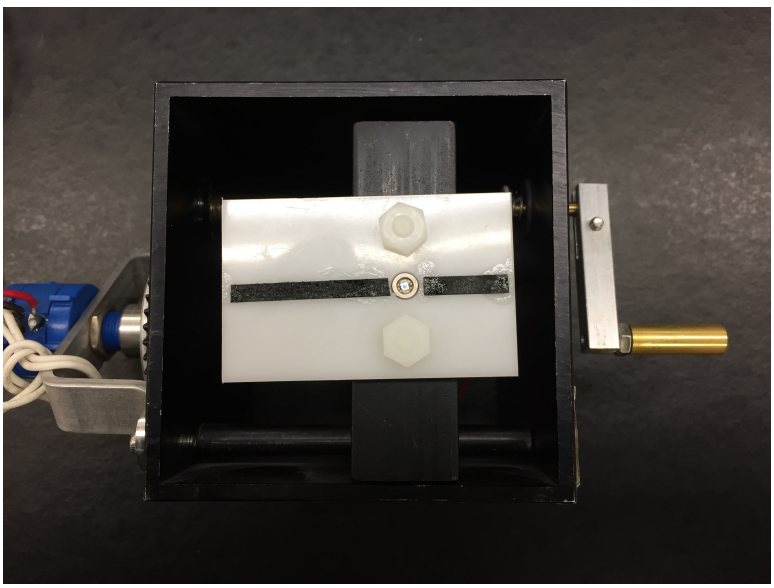

Figure 44: The photodetector: a photodiode mounted on a translation stage with a white plastic plate surrounding the diode. Black tape is positioned such that alignment of the interference pattern with the black tape should ensure good detection by the photodiode. The detector is translated via a crank, on the other side of which a potentiometer is used to transduce voltage to distance.

- **Scan of the laser beam profile**. The software should be set to "CH1 vs. CH0". Click the switch so that it is in "continuous" mode. Set the sweep rate to 0.01 sec, or 100 samples per second. Start at $x = 1cm$ and turn the handle counterclockwise at a slow rate (3sec/turn) so that the voltage change can fully respond to the filter connected on the photodiode's output. Start the measurement with the computer and slowly move the linear translator from x=1cm to x=4cm. Plot the beam profile in Excel by plotting the CH0 voltage on the x-axis and the CH1 voltage on the y-axis. Figure 45 shows what the graph should look like. Also, you can use this data set as your position to voltage conversion since your scan went from x=1cm to x=4cm. This portion will not be required in your report, however you may want save the data to file for voltage position conversion.

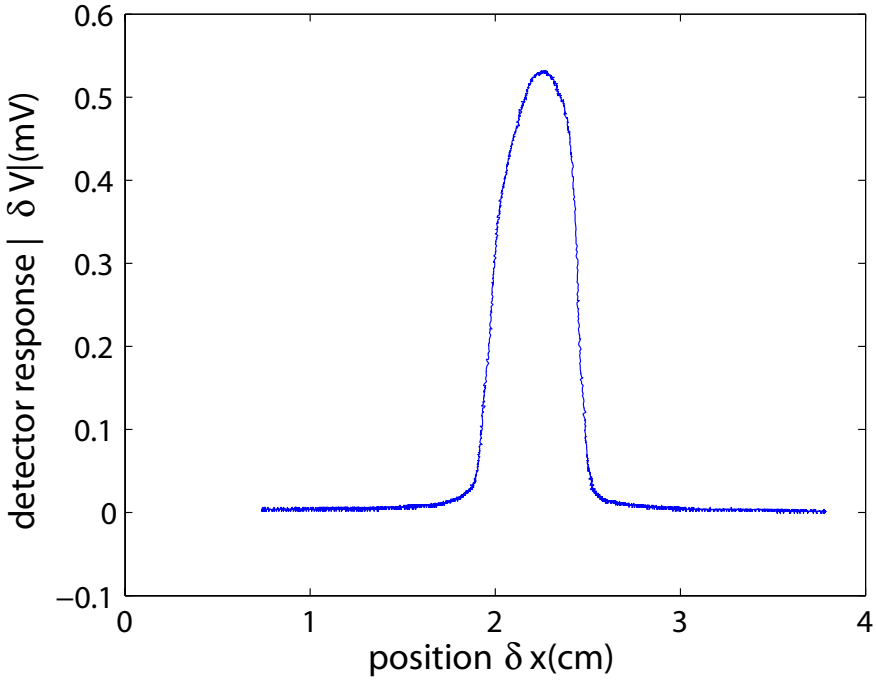

Figure 45: Graph of beam profile for a scan from x=1cm to x=4cm.

Single and Double-Slit Diffraction/Interference Patterns

With the small effective detection region of the photodiode we have sufficient spatial resolution to measure the fine lines of a diffraction pattern. In the following exercises, you will determine the slit width and slit separation of two double slit diffraction gratings by measuring the diffraction pattern, and also a single slit with identical slit width as one of the double slits. To verify the procedure, you will first measure the diffraction pattern of a single slit of known width, and then a double slit with known slit widths and spacings. Then, you will measure the diffraction pattern with unknown parameters and determine them from your data.

- Place a slide support between the laser and the detector. Measure the distance D to the detector (typically 35...45cm). Attach the slide with 4 different single slits whose values are marked. Choose the single slit of width b=0.04mm (this slit is labeled B). Position it so that the beam illuminates the slit and that the diffraction pattern aligns with the black strip on either side of the photodiode.

- Look at the transmitted light through the slit by holding a sheet of paper at different distances from the slit. You will see the diffraction pattern, a sequence of lines in horizontal direction (for a vertical slit). Before taking data with the computer, adjust the position of the slit such that the diffraction pattern observed on a piece of paper is as bright as possible.

- Next, scan the whole profile sweeping $x = 1 \rightarrow 4$cm while recording with the MyDAQ and save the data to file. Follow this procedure for the known single slit, the known double slit with identical slit width, and an unknown double slit with slit separation clearly wider than the known double slit. Try to identify a double slit with wider separation by holding the slide

in front of a lamp or cell phone light. There should be at least two whose separation is visibly wider than the known double slit.

As discussed in the introduction section, adjacent maxima and minima are used to calculate the slit separation d and the overall envelop minima are used to determine the slit width b. From the measured positions of adjacent maxima, find the angular spacing, calculate the slit spacing d and compare with the value given. The laser wavelength is λ=670nm. Save the data to file to include in your lab report.

- In order to see the dependence of the diffraction pattern on slit spacing, compare the pattern of the known double slit with that of the double slit with wider slit separation. The values of the second double slit are not given to you and should be determined from your measurements. From your data evaluate the two slit spacings d, and compare your measured slit parameters to the known slit parameters to verify the method of calculation. For the case of the larger slit spacing you can also determine the slit width b from the null in the envelope of the diffraction pattern. How does diffraction pattern change as the double slits become farther apart?

Diffraction Grating

You are supplied with a diffraction grating with 600 lines/mm. The identical lines are vertical and uniformly spaced. The grating, mounted to a 35mm slide frame, is illuminated with a red diode laser of wavelength λ=670nm and the diffraction pattern is observed in the transmitted light. The diffraction grating produces a diffraction spectrum that is easily seen by eye. Thus, for this portion of the assignment, you will be measuring the angles of adjacent maxima with a protractor and will not need the photometer setup. Your goal is to determine the angles of the maxima, and compare to the expected result.

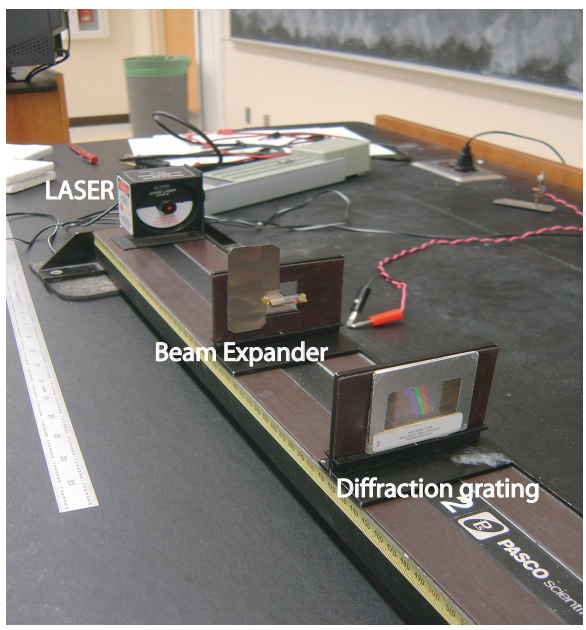

Figure 46: Laser, beam expander and diffraction grating. The beam expander is used to create a sheet beam of light.

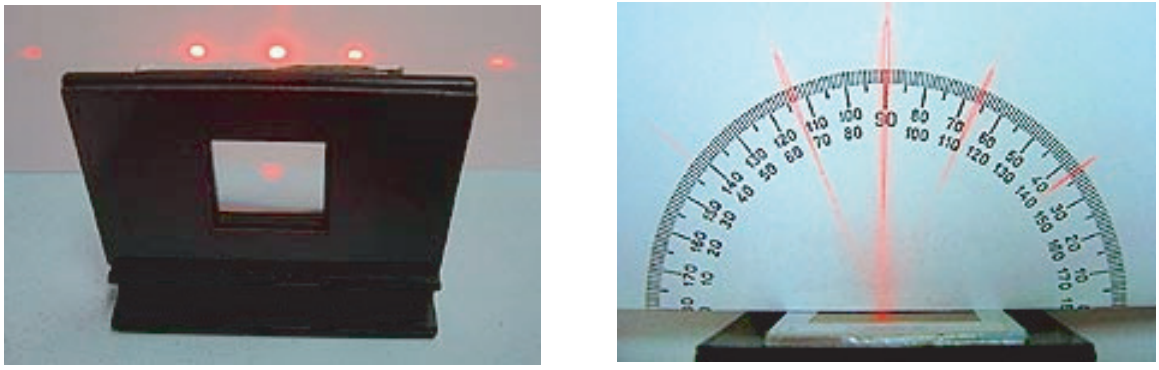

Figure 47: Collimated laser diffraction via diffraction grating on left (without beam splitter), and with beam splitter on right in order to measure angular diffraction

- The best results are obtained by expanding the circular laser beam into a sheet beam. This is accomplished with a short glass tube (called a beam expander) placed horizontally into the laser beam, which produces a vertical sheet beam. The beam expander is shown in figure 46. To improve the resolution insert two vertical metal sheets between laser and beam expander. These form an adjustable vertical iris, which narrows the horizontal beam width.
- Pass the sheet beam through the diffraction grating. On the transmission side of the grating place on the sheet of paper with printed protractor horizontally with origin where the beams emerge. You should see several diffracted beams. Read off the angles and verify $d \sin\theta = n\lambda$. If the $\pm$ angles are unequal the diffraction pattern is probably not horizontal and you need to incline the paper plane.

Dispersion of White Light by a Grating.

Use the collimated vertical sheet of light from the incandescent light bulb in the ray box (used in the geometric optics experiments) to illuminate the grating. Observe that the diffracted light beam separates into different colors. This is the principle of a spectrometer, an instrument to measure the spectrum of emission lines. Since $\sin\theta \sim \lambda$, the long wavelength colors (red) show a larger deflection than the short wavelength colors (blue). For the principle colors (red, green, and blue) measure the diffraction angles and calculate the wavelengths. Make sure you specify what the angles are in relation too.

More experiments in using diffraction patterns to determine the size of scatterers

Next, you will perform three additional diffraction experiments. The first will be to determine the thickness of a hair by observing its diffraction pattern. The second will be to determine the bit spacing of a CD or DVD by observing the diffraction pattern. The third is to observe the diffraction pattern of a two dimensional array, and determine the thickness and separation of the wires forming the array. **Record your results for all 3 in your notebook, however you will be required to comment on only one of these three in your report.**

Human Hair You can measure the thickness of your hair from the diffraction pattern of a laser beam. Pull from your head a preferably straight, dark hair and place it vertically into the magnetic

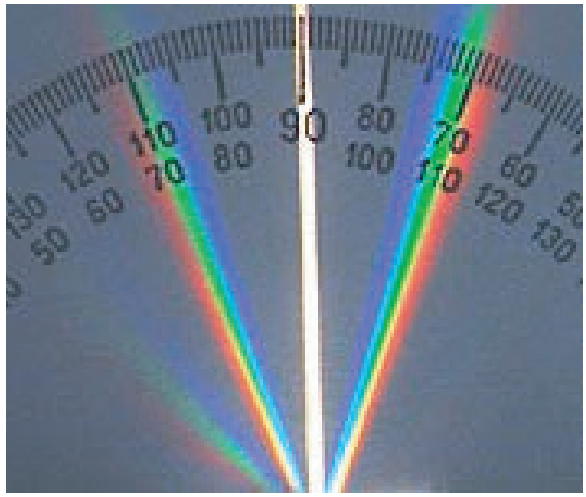

Figure 48: Separation by wavelength of white light by a diffraction grating.

slide support, using two metal strips to hold it down. Shine the laser beam against the hair and observe the transmitted light at a distance of about L=90cm from the hair. Observe single-slit diffraction pattern on a white piece of paper and mark where the maxima peaks are located. The spacing δx between adjacent maxima or minima yields the thickness of the hair. Repeat this experiment for different group members' hair.

Two Dimensional Array Two line gratings crossed at right angles form both a horizontal and a vertical diffraction pattern. This can be seen by shining a laser beam (not expanded) through a fine mesh grid. It has been mounted in a slide between two papers with a hole in the center. Do not touch the fragile grid. Display the transmitted light on a white sheet of paper placed vertically at a distance of 50-100cm from the grid. Your diffraction pattern should look similar to Figure 49. Explain its features: The horizontal dot spacing yields the vertical line spacing and vice versa. Is

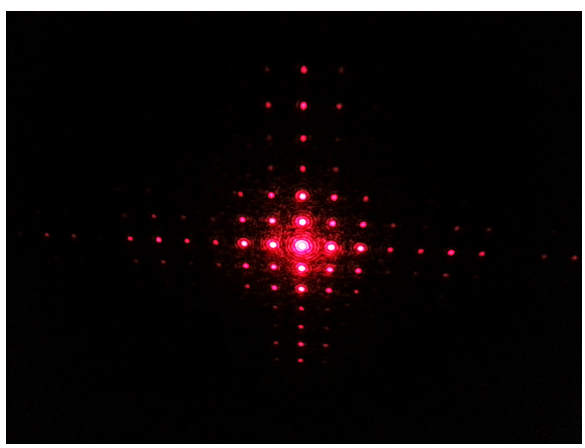

Figure 49: Pattern from the 2D diffraction grid.

the grid square? How many lines/inch does it have? From the envelope nulls you can determine the width between two wires (single-slit pattern).

Analysis

Double Slit Diffraction As discussed in the introduction section, adjacent maxima or minima of the interference pattern of a double slit are used to calculate the slit separation d and the overall envelop minima are used to determine the slit width b. From the measured positions of adjacent maxima of the double slit with known parameters, find the angular spacing using equation 3, calculate the slit spacing d and compare with the value given. The laser wavelength is $\lambda = 670nm$.

From your data evaluate the three slit spacings, d, for the double slits with unknown parameters. For the case of the largest slit spacing you can also determine the slit width from the null in the envelope of the diffraction pattern. How does the diffraction pattern (distance between adjacent maxima) change with slit spacing d? When determining the slit spacing, repeat for as many adjacent maxima as you can to provide multiple measurements of the slit spacing. From these multiple values, find the average slit spacing and the uncertainty given by the standard deviation of the mean.

Diffraction Grating A diffraction grating is many many slits equally spaced. How does this large number of slits affect the diffraction pattern? Use your observations by eye of the double slit and diffraction grating interference patterns to answer this question.

The distance between these sharp maxima is determined by equation 3. First, you measured the interference pattern of the diffraction grating with a laser as the light source. Since the laser has a wavelength of 670nm, use this measurement to verify the spacing of the diffraction grating slits: 600 lines/mm. Next, a white light source was used to illuminate the diffraction grating. White light is a combination of light of different wavelengths. Since the position of the diffraction peaks are dependent on wavelength (equation 3) the different colors will be diffracted a different amount. Use your measured spacing of the diffraction grating (previous part) and the diffraction angles of red and blue light to calculate the bandwidth (i.e. the range of frequencies) of visible light. For the diffraction grating measurement, your uncertainty will be determined by your ability to read the protractor angles.

Additional Diffraction Measurements In the final portion of the exercise, you performed three experiments to measure the size of various diffracting objects. The three objects used are (1) a human hair (2) a CD or DVD and (3) a 2-dimensional grating. Pick one of these three measurements and, using your knowledge of diffraction and interference patterns, determine the size of the diffracting object.

Lab Assignment

For this assignment you will present the data collected during lab along with a discussion of your results in the report section. Also, you will answer a few questions related to the physics encountered during of the lab.

Lab Notebook

These questions are to be answered in your lab notebook and either graded by or handed in to your TA before leaving lab. Additionally, you should record any significant measurements and values in your lab notebook for reference later on when you write your report.

1. Briefly present results for the three additional diffraction measurements. Provide a sketch of the interference pattern for each diffracting element.

2. For all of the double slits that you analyzed, you should be able to tell by eye that one of them has a larger slit separation (d) than the others. If you are having trouble seeing this, hold the double slit up to the lamp light at your lab station and view it from the opposite side. With that knowledge and your gathered data, as the double slit spacing increases, do the diffraction peaks become closer together or farther apart?

3. Which phenomena, single slit or double slit interference, is responsible for the shape of the intensity curve's envelope (the function that smoothly connects all the maxima of the full intensity curve)? What about the oscillations within the envelope?

Lab Report

For the lab report you will be asked to present data before and after manipulation and explain important results. This will be a full lab report with all parts of the experiment included. *Your report should contain the following sections*

1. **Cover Page**

   - Descriptive title
   - Date the lab was performed
   - Your name, and your lab partners' names.
   - Your TA's name and lab section

2. **Introduction**

   The introduction section explains, in your own words, the purpose of your experiment and how you will demonstrate this purpose. Try and be as brief as possible, yet still get your point across.

3. **Experimental Results**

   This section should briefly explain what was measured and how the data was collected (diagrams of the experimental set up may be helpful), present the raw data in graphical form (if possible) including uncertainty values with all numbers. Your graph should include labels on both axes that include units. Label your graphs as figure 1, figure 2, etc, so that you can refer to them in your text. In the text, explain the meaning of the variables on both axes and include an explanation that makes it clear to the reader how to interpret the information displayed on in the plots.

   your report should contain:

   - Explain how you measured diffraction/interference patterns, and include a graph of diffraction pattern for the double and single slit with *known parameters*.
   - Plots of diffraction patterns for double slits with *unknown parameters*.
   - For the diffraction grating: describe the the diffraction patterns as observed by eye, and report the measured angles for both laser light and white light. For white light, present the angular range for for red, green, and blue light in a table.

- Describe the observed diffraction pattern as observed by eye and report the measured angles for *1 of the three* '"additional diffraction"' measurements.

4. **Analysis**

   This section should present any calculations performed on the raw data, including uncertainties using propagation of errors. Example: if you are testing Ohm's Law $V = IR$, and you measured V and R, then here you calculate I. If you have a theoretical value for your calculated quantity (I in this example), state whether it is within your uncertainty range. Also, answer any questions proposed in the lab manual. In this section you will present...

   - Verify the slit width and slit spacing of the double slit with known parameters, and the slit width of the single slit. Is the provided value for the slit spacing within your experimental uncertainty? Compare and discuss the significance of the first minima of the single slit pattern and the first envelope minima of the double slit pattern.
   - Determine the slit spacing and slit width of the double slit with unknown parameters.
   - For the diffraction grating: verify the slit spacing from your measurements with the laser, and calculate the bandwidth (spread in frequencies) of visible light.
   - Determine the size of one of the three additional diffraction measurements.

5. **Conclusion** State how your results demonstrate (or fail to demonstrate) the objectives you presented in the introduction section.

Appendix A: Error Analysis

Introduction

This appendix concerns experimental uncertainties, and how we quantify these uncertainties in measured values. In any laboratory exercise, you will need to use the methods of error analysis demonstrated here to analyze your experimental uncertainty.

Uncertainty in Measurements

Any experimentally measured quantity, call it x, cannot be known exactly due to error in our measurement. Therefore, when a measured quantity is reported, for example in a scientific journal or an academic lab report, one presents the measured quantity as

$$x = (x_{best} \pm \delta x)[units],$$

where x_{best} is our best guess at the quantity x, δx quantifies the uncertainty in our measurement, and the $[units]$ are the units of measurement. Uncertainties in measurement are often classified into two distinct categories, systematic and random.

Systematic errors are those that affect entire data sets, often due to the measurement device or the experimenter's use of the measurement device. For example, if a ruler's mm markings were actually 1.2 mm apart, this would affect each data point measured with that ruler. Systematic errors do not affect the spread of a statistical distribution, but can cause a shifts in the distribution's mean or median.

Common systematic errors that affect a distribution linearly are offsets from zero, and an overall scaling factor (or multiplier). For a linear distribution of data (something that can be fit in the form $y = (m \pm \delta m)x + (b \pm \delta b)$, an offset from zero looks like an additional offset on the y-intercept of the fit, and a multiplier looks like an offset to the slope of the fit. For example, if the true fit looked like $y = ax + c$, but is measured to be $y = (a + a')x + c + c'$, a' is a scaling systematic error and c' is an offset systematic error

Throughout this course, you will be mainly concerned with quantifying random (or statistical) errors. When measuring a single quantity repeatedly, you obtain a set of measured values that has a *mean value* and a *standard deviation* (among many other statistical quantities). We will often use the standard deviation to quantify this random error and determine the experimental uncertainty.

As a result or this random error, our confidence level on the outcome is improved by making more measurements. It is worth emphasizing that appreciating the impact of random uncertainties is fundamental to the process of measuring any physical quantity. Whether it seems relevant for a given situation is quantitative: is the confidence level in the measured outcome small or large when compared to what is needed?

Lets assume N measurements of x are made, yielding values $x_1, x_2, ..., x_N$. A large number of such measurements, called an ensemble, has certain useful properties such as the mean value, denoted by $\overline{x}$, and the spread of the values around it, called the standard deviation, denoted by σ_x. In nearly all situations our best estimate of x is the mean value of these measurements:

$$\overline{x} = \frac{1}{N}\sum_{i=1}^{N} x_i \tag{30}$$

As more measurements are made, we expect that our measured mean value $\overline{x}$ will approach the "true" value X, which is defined in the weak law of large numbers as the mean value if an infinite number of measurements were made. That is,

$$X = \lim_{N\to\infty} \overline{x} = \lim_{N\to\infty} \frac{1}{N}\sum_{i=1}^{N} x_i.$$

What we seek is a quantitative measure of how far the measured mean $\overline{x}$ may deviate from the "true" value X. Standard practice is to use a quantity called the standard deviation of the mean, denoted by $\sigma_{\overline{x}}$ as such a measure. Then, when one publishes (as in your lab reports for this class) a measured quantity, it is written as

$$x = \overline{x} \pm \sigma_{\overline{x}}$$

signifying that we are confident X, the quantity we ultimately want to know, lies within some range of values around our measured $\overline{x}$, due to random error. Standard deviation is based on approximating the data distribution as a Normal or Gaussian distribution. This distribution tells us how many points fall into a standard deviation width, as shown by Figure 50. A smaller value of the standard deviation means that our data is closer to our average, thus improving the accuracy of the average value we measured.

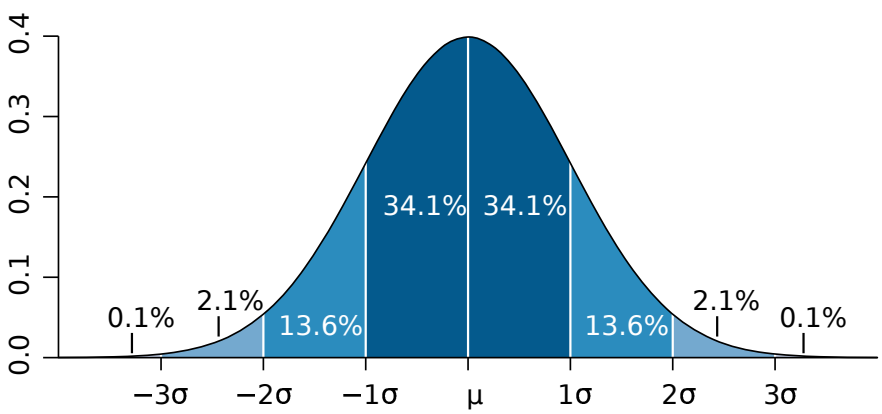

Figure 50: The normal distribution, which is a Gaussian distribution and special in the world of statistics.

Note: There is a slight but important difference between the standard deviation and the standard deviation of the means. A certain measurement may have an inherent random uncertainty in its resulting values that is unavoidable. Let us assume this uncertainty is Gaussian in nature. So, if we measure this value 10 times, 100 times, 1000 times, or 10^{10} times, the data will always follow a the same Gaussian distribution and result in the same standard deviation in the values. We would rather like to use a value to quantify our uncertainty that decreases as we take more measurements, since as we take more measurements we become more confident that our mean value has approached the true mean value.

The standard deviation of the means can be thought as the standard deviation of an ensemble of values, all of which are the means of other ensembles of experimentally determined values. As we increase the size of our experimental ensembles, their means will become closer and closer to the

true mean of the measurement. Then, if we create an ensemble of all those means, it can be imagines that the standard deviation of the means will in fact decrease as we take more measurements.

The beauty of statistical theory allows us to calculate the standard deviation of the means while only collecting a single dataset. If we are interested in knowing the standard deviation of the means for a measured value x that we measure N times, then from our data set $\{x_1, x_2, x_3, ..., x_N\}$ we can calculate the standard deviation of the mean via the formula

$$\sigma_{\overline{x}} = \frac{1}{\sqrt{N}}\sigma_x \tag{31}$$

where σ_x is the standard deviation of our single experimental data set. It is worth memorizing this formula, as you will be using it a lot throughout this course.

Propagation of Errors

When performing an experiment, we seek to determine quantities that are measured directly, and also quantities that are *calculated* from something that is directly measured. The fact that error exists in the latter type is referred to as **propagation of error**, and you will encounter this in nearly every laboratory exercise. Consider a quantity F that is a function of 2 directly measured quantities, x and y:

$$F = f(x, y)$$

Since our measured quantities x and y are known only to within some range due to random error: $x = \overline{x} \pm \sigma_{\overline{x}}$, $y = \overline{y} \pm \sigma_{\overline{y}}$, then our calculated quantity must also be known only to within some range: $F = \overline{F} \pm \sigma_{\overline{F}}$. We wish to know how to determine this uncertainty in F due to the random error in measuring x and y. This is calculated by:

$$\sigma_{\overline{F}} = \sqrt{\left(\frac{\partial f}{\partial x}\right)^2 (\sigma_{\overline{x}})^2 + \left(\frac{\partial f}{\partial y}\right)^2 (\sigma_{\overline{y}})^2} \tag{32}$$

which is commonly called the error propagation equation (the derivation of this equation can be found in chapter 5 of John Taylors Introduction to Error Analysis, 2nd edition). To be completely general, if we imagine the function f is dependent on a set of N measured values $\{x_1, x_2, x_3, ..., x_N\}$ with associated errors $\{\sigma_{\overline{x_1}}, \sigma_{\overline{x_2}}, \sigma_{\overline{x_3}}, ..., \sigma_{\overline{x_N}}\}$, then the uncertainty in F is given by

$$\sigma_{\overline{F}} = \sqrt{\sum_{i=1}^{N} \left(\frac{\partial f}{\partial x_i}\sigma_{\overline{x_i}}\right)^2} \tag{33}$$

It is highly suggested that you always use this general formula to determine the propagation of errors, working through the partial derivatives to see how different functional dependencies affect experimental uncertainties.

Appendix B: Performing a Linear Regression in Excel

A Linear regression is done by the either "least squares" or minimum Chi Squared method. Suppose you have some set of data that you have plotted against each other, x and y, and you want to run a regression line through it. You write the equation of a line: $y = m[x] + b$. In this case you can have at most two parameters that you can vary to completely describe the line. These parameters are m and b. When a linear regression is performed, the parameters are set usually randomly and the sum of the square of the residuals is computed. The residuals are the difference between your data point y, and what you expect to calculate from your regression line at that x value so $m[x] + b$. You do that for every data point then square them and you have the sum of the residuals squared. The program will then change the parameters m and b and calculate the sum of the residuals squared repeatedly over a certain range of values. It will then take the parameters m and b that correspond to the minimum value of the sum of the residuals squared, and take that for the slope of the final regression line. Notice that this method neglects the uncertainties (error bars) on each point.

To make the least squares regression line appear on the plot, right click on any data point then select Add trendline. Highlight linear and click on the options tab. Here you can select whether or not to set the Intercept to zero, which will be discussed in more detail later when I talk about all of the regression data. Click ok to add the line.

- Make sure that you have an internet connection and add the Analysis package to Excel. You can do this by going to the menu and clicking tools then Add-ins. Next check the box next to Analysis toolpack and hit ok. Follow the instructions and the package will be installed.
- We can now use the analysis package. After you have made your plot for your analysis, make sure that you click an empty cell, go to Tools, Data Analysis. This will open a window with several analysis functions you can use. Scroll down until you find Regression. Highlight it by clicking it and hit ok.
- This will open a new window. In the Input Y Range, drag a box around your y data values. In the Input X range, drag a box around your x data values. You need to make a decision as to whether or not you want the constant to be fixed at zero. For example, if we were to do a regression on a plot of Q versus V of a capacitor, we know that if there is no charge on the capacitor, there should be no voltage across it. So in that case we would want to check the constant is zero box.
- On the output options, you can check Output range and select an empty cell or just leave it on new worksheet (default) to get all of the regression data on a new worksheet. Sorting through all of the data in 51, we see some values of interest. These values are the X Variable 1 Coefficients and Standard Error, as well as the df and SS values for the Residuals. The Coefficients for X Variable 1 are in fact the value of the slope of the line, and the Standard Error is the uncertainty on it. So the slope would be $m = 1.58 \pm .11$. the "R square" value as a goodness of fit parameter. To use r squared, simply know that the closer to 1 it is, the better the goodness of fit.

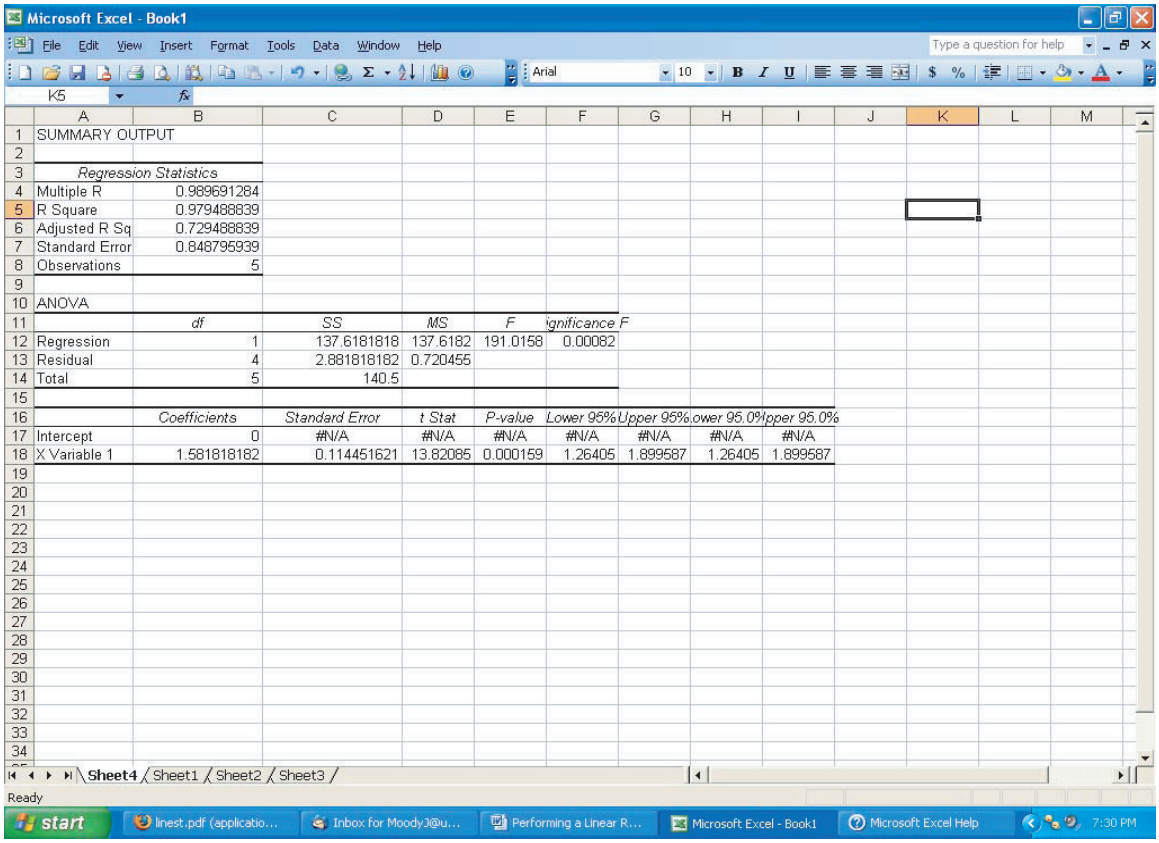

	A	B	C	D	E	F	G	H	I
1	SUMMARY OUTPUT								
2									
3	*Regression Statistics*								
4	Multiple R	0.989691284							
5	R Square	0.979488839							
6	Adjusted R Sq	0.729488839							
7	Standard Error	0.848795939							
8	Observations	5							
9									
10	ANOVA								
11		*df*	*SS*	*MS*	*F*	*ignificance F*			
12	Regression	1	137.6181818	137.6182	191.0158	0.00082			
13	Residual	4	2.881818182	0.720455					
14	Total	5	140.5						
15									
16		*Coefficients*	*Standard Error*	*t Stat*	*P-value*	*Lower 95%*	*Upper 95%*	*ower 95.0%*	*pper 95.0%*
17	Intercept	0	#N/A	#N/A	#N/A	#N/A	#N/A	#N/A	#N/A
18	X Variable 1	1.581818182	0.114451621	13.82085	0.000159	1.26405	1.899587	1.26405	1.899587

Figure 51: Regression output in Excel

Appendix C: Data Acquisition

A Dell PC (1.7 GHz Pentium 4 processor, 256 MB SDRAM, 20 GB hard drive, CD-RW, 3.5" floppy drive, 17" monitor) is provided on each station. The operating system is Windows XP. Available software includes Microsoft Office and custom-written modules based on National Instruments LabVIEW. No internet connection is provided. To copy data in order to make analysis later, you need either a writable CD or a USB flash drive.

A data acquisition card from National Instruments (NI6024E) is installed in the computer. It contains a 12 bit, 200 ksample/sec Analog to Digital Convertor (ADC). Up to 8 differential input signals can be measured. Multiplexing between several input signals decreases the conversion speed. The maximum input voltage range is ±10 V. The common-mode voltage (voltage of each channel to ground) is also limited to 10 V.

Input

The inputs for the ADC are at a connector box. The BNC coax connector on the left side of the front panel is the input for an external trigger signal (TTL, ±5 V). To provide the trigger signal, connect the TTL output on the signal generator and this trigger signal input with a BNC cable.

Three input channels (±10 V maximum) are marked on the front panel as three pairs of + and −. From left to right, we name them Channel 1, 2, and 3. The inputs are differential, *i.e.*, neither electrode is connected to ground, and what the computer measures is the voltage difference between + and − terminals at each channel. Connections are made by alligator clips.

Software

The data acquisition is controlled by LabVIEW Virtual Instruments modules. The modules are accessed via a software, called "4BL Main Menu", whose shortcut icon is on the screen. If it has been removed, the full path is `C:\Program Files\4BL\Main Menu`. Once we open the software by double-clicking the icon, a main menu for this data acquisition software will be displayed. We can then further choose different functions to perform according to the task we would like to complete. The following two functions will be frequently used in this course.

Acquire waveforms

This program is used to measure voltages at one or more channels as a function of time for repetitive waveforms. In order to synchronize the data acquisition a trigger input is required. The program works like a digital oscilloscope.

To start acquiring waveform on only one channel (Channel 1), single-click "Acquire Waveform (1 Channel)" on the main menu. There are a couple of parameters we should specify.

1. Set the expected limits of the measured voltages. Voltages higher than the limit will be truncated in the measurement.
2. Choose the scan rate, *i.e.*, how many samples are acquired within a second.
3. Set the total number of points to acquire.
4. Choose the time limit for acquiring data.

First, we should When every setting is ready, click “Acquire” and you will see the waveform on Channel 1 displayed as a function of time. The time span is given by the ratio of the number of points acquired and the number of points per second. The default displayed voltage range (5 V) can be changed by highlighting the upper or lower voltage limit, typing in the desired value followed by “Enter”. When satisfied, single-click “Save to file”. It prompts for a file name (e.g., Oct29-2.xls) to be saved. To get out of the data acquisition program, click on “Stop?”, “Done”.

If we would like to sample two channel waveforms simultaneously, single-click “Acquire Waveforms (2 Channel)” on the main menu. This will enable us to sample the waveforms on both Channel 1 and 2. The sampling procedure is the same as in sampling only one channel. Signals on different channels are identified by the displayed curve colors.

After acquired the waveforms on two channels, we could also study the statistical properties of the two channels by single clicking the ”Statistics”. A new window will pop up, showing the mean value and standard deviation for both channels, and the covariance, correlation between channels as well.

Sample signals continuously

This program is used to record a slowly varying signal. It records data at specified time intervals, writes continuously to file until stopped by terminating the program. No trigger is required. The program is also called a ”data logger”.

To call the program double-click ”4BL Main Menu”, single click ”Sample 1 channel (continuously)” which prompts for various parameter choices:

1. Single-click on ”Reset limits” and adjust high and low values in units of 1 V or fractions thereof by typing over the displayed numbers. Press ”Done” to exit.

2. Single-click on ”Time between points” and increment in units of 1 sec or fractions thereof by typing over the displayed numbers.

3. Single-click on ”Acquire” and specify a file name (e.g., Oct29-3.xls). When you press ”Save” the program starts to record.

The waveform is displayed on a screen with 64 horizontal data points. It will scroll in time. The vertical scale changes automatically to display the signal at any amplitude. However, it saturates when the specified voltage limits are exceeded. When satisfied single-click on ”Stop acquiring” to end the data file. If you want to take another file press ”Acquire” again. You can overwrite (replace) an existing file but you cannot append to a file. If you want to get out of the program to process the file, press ”Done?” to quit.

We could also sample more than one channel signals continuously by choosing ”Sample 2 channel (continuously)”, for example for 2 channels. The procedure is the same as described above.

Appendix D: DC Power Supply

The power supply in each station is able to provide a constant DC voltage during the experiments, see Fig. 52. There are three terminals on the right hand side of the front panel. The voltage output can be obtained from the red + and the black - terminals, while the green one in the middle is grounded at all times.

Figure 52: A photo of the power supply.

On and Off

The main control knob locates at the center of the front panel. To turn on the power supply, simply turn this knob clockwise. After a click sound a green light named POWER above this knob will be turned on, indicating the power supply is working properly. When the experiment is finished, please remember to power off the supply by turning this knob all the way counterclockwise until a click sound.

There is also a switch on the top of the front panel. The switch could be on either STBY or DC ON positions. During the experiments, if you would like to power off the supply temporarily, you could simply put the switch on STBY position.

Adjust Voltage

The output voltage could be adjusted by turning the main knob mentioned above. The output voltage range, either $0 - 50$ V or $0 - 25$ V, is set by a switch next to the knob. There is also a voltmeter on the right side of the front panel, which enables us to monitor the output voltage.

Overload

The power supply can afford only a certain amount of current flowing through it. The maximum amount of current can be set by another knob on the left side of the front panel, and the current level can be monitored from the amperemeter next to this knob.

If the current is above the maximum current we set, the power supply will automatically shut down, and a red OVERLOAD light next to the amperemeter will be turned on at the same time. In this case, you should reduce the current to the correct range, and press the red RESET button on the upper left corner of the front panel to reset the power supply.